LEGUAN®

Operator & service manual

170 195 225 265

EN-US
A470417

Straight to the point

PART OF AVANT® GROUP

LEGUAN OPERATOR AND SERVICE MANUAL

This operator and service manual is valid on serial numbers:
170: 0110100->
195: 0090100 ->
225: 0080500 ->
265: 0100100 ->

Version history

Date	Change
4.9.2024	Original document
12.12.2024	Added 225 information
17.12.2025	Added 170 information

Table of contents

1. INTRODUCTION AND WARRANTY CONDITIONS 6
1.1 Introduction 6
1.2 Display of safety instructions 6
1.3 Warranty conditions 7
2. GENERAL INFORMATION 8
2.1 Technical specifications (imperial) 10
2.2 Technical specifications (metric) 11
2.3 Main dimensions and outreach diagram 12
2.3.1 Leguan 170 12
2.3.2 Leguan 195 13
2.3.3 Leguan 225 14
2.3.4 Leguan 265 15
2.4 Signs and decals 16
3. SAFETY INSTRUCTIONS 20
3.1 Before starting operation 20
3.2 Risk of tipping over 21
3.3 Risk of falling 21
3.4 Risk of collision 22
3.5 Risk of electric shock 22
3.6 Risk of explosion/fire 23
3.7 Daily inspection before starting operation 23
3.8 Use of emergency stop switches 23
3.9 Safety instructions for drive control 24
3.10 Defining the gradient of the slope 24
4. CONTROLS AND SWITCHES 25
4.1 Controls in platform 25
4.1.1 Platform overload indicator light 26
4.1.2 Dynamic outreach control indicator light 26
4.1.3 Fault light 26
4.1.4 Inclination indicator light 27
4.1.5 Boom center position indicator light 27
4.1.6 Boom transport position indicator light 27
4.1.7 Low fuel indicator light 27
4.2 Lower control panel 28
4.3 Wireless remote control (option) 29
4.4 120 V connection and switches 30
5. OPERATION 31
5.1 Starting the combustion engine / electric motor 31
5.1.1 Combustion engine 31
5.1.2 Electric motor 31
5.1.3 Start-stop function 32
5.2 Speed selection switch 32
5.3 Drive control 32
5.3.1 Elevated driving position (EDP) 33
5.3.2 Features of tracked access platform 33
5.4 Operation of the outriggers 35
5.4.1 Automatic leveling 35
5.4.2 Outrigger manual operation 36
5.5 Operation of the booms 36
5.5.1 Home function 37
5.5.2 Back to work position 37
5.6 Remote control (option) 38

5.7 Ending the operation 38
5.8 Additional instructions for winter use 39
6. EMERGENCY LOWERING AND EMERGENCY BYPASS 40
6.1 Emergency lowering 40
6.2 Backup operation 40
6.3 Platform load control override 41
6.4 Safety function override button 42
7. TRANSPORTATION 43
8. SERVICE, MAINTENANCE AND INSPECTION REGULATIONS 44
8.1 General instructions 44
9. SERVICE INSTRUCTIONS 45
9.1 Service and checks, maintenance schedule 45
9.1.1 General service info 46
9.1.2 Major inspection 46
9.1.3 Crawler track sprocket wheel bolts 46
9.1.4 Inspection and adjustment of the track tightness 46
9.2 Inspection of mechanical structures, hydraulic and electric systems 47
9.3 Telescope boom 48
9.4 Slew ring bolts 48
9.5 Greasing 49
9.5.1 Greasing diagram 49
9.5.2 Greasing of the slew ring 50
9.5.3 Greasing the telescope boom chain pulley and inspection of the chain 51
9.5.4 Greasing of telescope booms 51
9.6 Handling of fuel and refueling 52
9.7 Hydraulic oil and hydraulic oil filter replacement 52
9.8 Hydraulic oil level 53
9.9 Hydraulic system adjustments 53
9.10 Drive motor gear oil change 53
9.11 Throttle motor bearing and adjustment 54
9.12 Slewing ring brake adjustment and cleaning 55
9.13 Diagnostics and checking the error codes 56
9.14 Outrigger set up control 57
9.15 Overload control components 58
9.16 Access platform position monitoring 59
9.17 Boom movement speeds 59
9.18 Testing of safety valves 60
9.19 Service reminder 61
9.20 Fuses 62
9.21 Start battery check 62
9.22 Battery handling 63
9.23 Handling of fuel and oil products 63
10. REPAIR INSTRUCTIONS 64
10.1 Examinations 64
10.2 Tests 64
10.3 Welding 65
11. INSTRUCTIONS FOR TEMPORARY STORAGE 66
12. INSTRUCTIONS FOR CHANGE OF OWNERSHIP 67
13. INSTRUCTIONS FOR DISPOSING THE ACCESS PLATFORM 68
14. TROUBLESHOOTING 69
15. PERFORMED SERVICE 73
Attachments: Hydraulic schematic, Electric schematic, Engine manual

1. INTRODUCTION AND WARRANTY CONDITIONS

1.1 Introduction

LEGUAN LIFTS wants to thank you for purchasing this Leguan access platform. It is the result of Leguan's long experience in design and manufacturing of access equipment.

We ask you that you read and understand the contexts of this manual completely before operating the access platform. This will improve your operating and maintenance efficiency, help avoid breakdowns, damage and extend the life of your machine.

1.2 Display of safety instructions

Safety sign, signal word	Meaning
DANGER	Identifies a dangerous situation that will result in death or serious injuries if not avoided.
WARNING	Identifies a dangerous situation that may result in death or serious injuries if not avoided.
CAUTION	Identifies a dangerous situation that will result in moderate or minor injuries if not avoided.
NOTICE	Damage to equipment: the product or the environment risks damage.

Pay special attention to these symbols. They indicate important safety factors that require special attention. Every operator must read and understand this manual before starting operation, and the instructions in this manual must be followed. If you are lending the access platform out to somebody, make sure that they familiarize themselves with and understands these instructions. If there is anything unclear with the operation, please contact your Leguan dealer.

If spare parts are needed, use only original LEGUAN parts. They will provide your machine with the maximum life expectancy and ensure optimum safety.

It is not possible to give explicit operating instructions to all operating conditions of the machine. Therefore, the manufacturer is not responsible for any damage caused by eventual faults in this Operators Manual.

The manufacturer does not accept any responsibility for consequential losses resulting from the use of this self-propelled access platform.

The lifespan of the track system of an access platform on rubber tracks is heavily dependent on the working environment and work methods. If the access platform is being used on terrain with stones or gravel, on demolition sites with concrete, or in an environment with scrap metal, the lifespan of the track system may be significantly reduced. Therefore, damage to the tracks, track rollers or crawler track chassis, caused by operation in such environments, is not covered by warranty.

The machine operator can influence the service life of the tracks by complying with instructions for their use and maintenance.

1.3 Warranty conditions

This product is warranted for a period of twenty-four (24) or 1000 hours. In the event a fault occurs which is attributable to manufacturing or assembly defect, contact the dealer without delay.

Warranty covers manufacturing and material defects. All warranty obligations end when the warranty period ends. Warranty repair that has been started will be completed regardless of the ending date of warranty period.

A condition for the warranty is that both the buyer and the seller have accepted the delivery. If the buyer is not present when the delivery takes place and doesn't make a complaint within 14 days of delivery of this access platform, it is considered that the sale is closed and the warranty period has started.

Warranty is limited to the repair of a faulty access platform without cost at an authorized Leguan service workshop. The warranty period for parts that are changed in connection with the repair will end when the warranty period for the access platform ends. Parts that have been changed in the warranty repair will remain Leguan Lifts' property without compensation.

Warranty does not cover the following situations:

- Wrong or negligent use of this product, or mischief.
- Acts of vandalism.
- Any repairs or modifications to the product, performed without the prior authorization of the manufacturer.
- Not following service and maintenance instructions.
- Machine breakdowns due to causes other than a manufacturing error.
- Adjustments, repair and the replacement of parts due to normal wear and tear, negligent use or non-compliance with the instructions for use.
- Exceptional strain placed on the access platform, sudden and unforeseeable events, natural disasters.
- External, mechanical or chemical causes (damage to the paintwork, such as scratches and abrasions caused by flying stones, pollution and environmental impurities, strong detergents, or by lifting operations or lifting equipment).
- Any patterns or uneven patches on the paintwork.
- if the warranty claim is not submitted within reasonable time of the buyer observing the flaw or when the flaw should have been noticed. Notification must always be submitted within two (2) weeks of the buyer noticing the defect. - under all circumstances, the buyer must act so that his action does not make the defect(s) worse.
- The manufacturer does not accept any responsibility for consequential losses resulting from the use of this access platform.

In the event a fault occurs that is attributable to manufacturing or assembly defect, contact the dealer without delay.

2. GENERAL INFORMATION

LEGUAN is a self-propelled Mobile Elevating Work Platform – commonly called an access platform – designed for indoor and outdoor use. Access platforms are designed for the lifting of persons and their equipment only. Using an access platform as a crane is prohibited.

LEGUAN access platforms are designed and built in accordance with the international safety standards and MEWP (Mobile Elevating Work Platform) standards.

The main parts of the machine are shown in figure 1. The numbered parts in the figure:

1. Chassis
2. Transmission (tracks)
3. Outrigger
4. Outrigger cylinder
5. Slewing ring
6. Lower control box
7. Pedestal
8. Lower boom cylinder
9. Self levelling bar 1
10. Lower boom 1
11. Linkage piece 1 *
12. Self levelling bar 2 *
13. Lower boom 2 *
14. Linkage piece 2
15. Upper boom cylinder
16. Self levelling cylinder (primary cylinder)
17. Telescope cylinder
18. Upper boom
19. Telescope boom 1
20. Telescope boom 2
21. Jib boom
22. Self levelling bar 3
23. Jib boom cylinder
24. Platform control box
25. Platform
26. Self levelling cylinder (secondary cylinder)

* Not used in Leguan 170

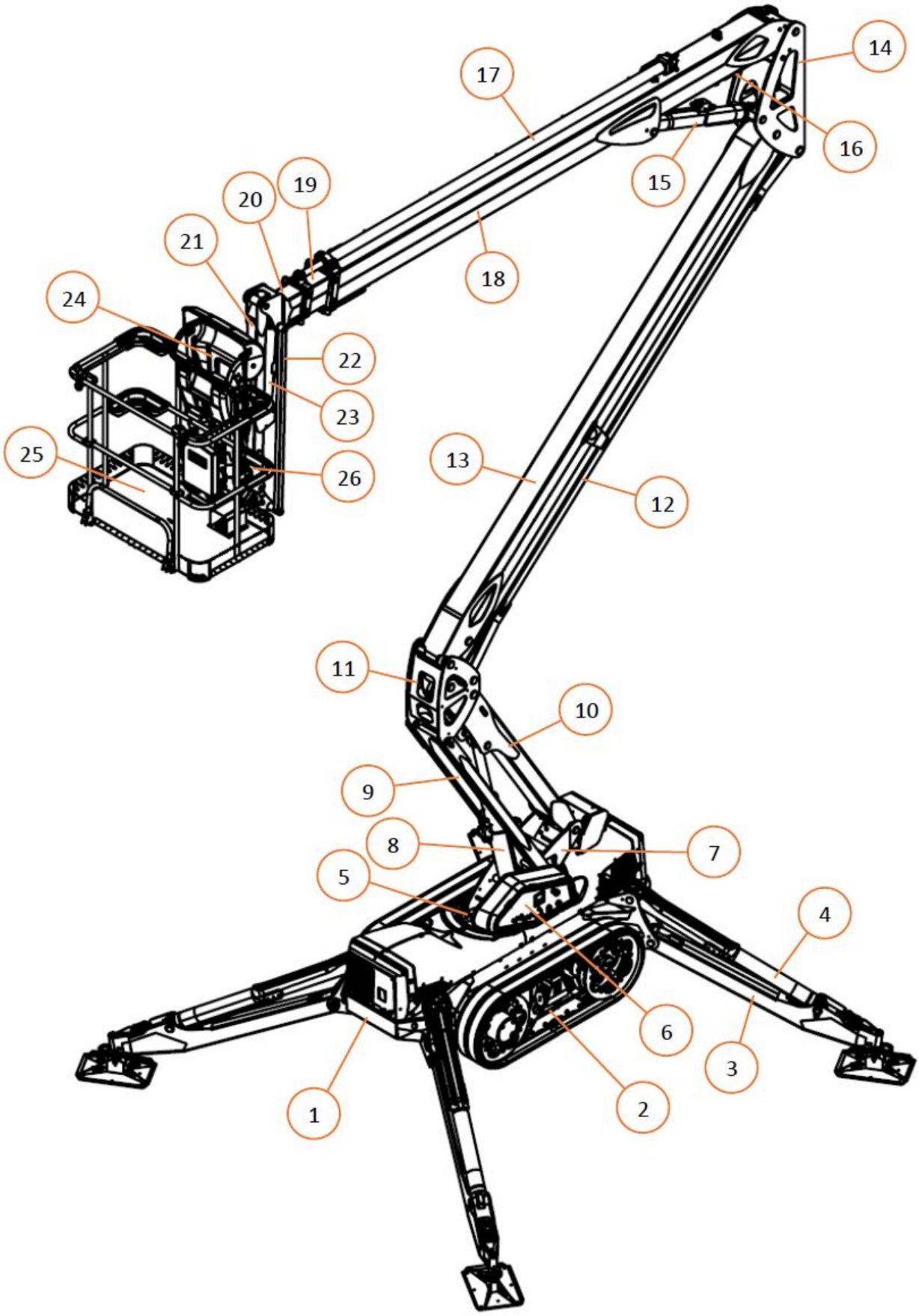

Figure 1. Main parts

2.1 Technical specifications (imperial)

Leguan model	170	195	225	265
Working height	55 ft	65 ft	74 ft	87 ft
Max. platform height	48 ft	58 ft	67 ft	80 ft
Max. outreach @ 551 lbs	26 ft	29 ft	30 ft	36 ft
Max. outreach @ 265 lbs	29 ft	33 ft	37 ft	45 ft
Max. platform rated load	551 lbs			
Max. wind speed	28 mph			
Max. manual force	90 lbf			
Transport length	17 ft 7 in	17 ft 4 in	19 ft 9 in	22 ft 7 in
Transport length without platform	15 ft 5 in	15 ft 2 in	17 ft 7 in	20 ft 6 in
Transport height	7 ft 1 in	7 ft 1 in	7 ft 3 in	7 ft 6 in
Width	4 ft 1 in			
Platform dimensions, W x L, 2 persons	4 ft 4 in x 2 ft 6 in			
Platform rotation	± 55°			
Boom slewing	± 220°			
Gradeability	45 % (25°)			
Gradeability sideways	45 % (25°)			
Max. allowed levelling inaccuracy	1.0°			
Min. required space for outrigger set up	14 ft x 14 ft 4 in			15 ft 5 in x 15 ft 11 in
Max. gradient of slope for outrigger set up	25 % (14°)			23 % (13°)
Weight, depending on equipment	5580 lbs	5950 lbs	6340 lbs	8640 lbs
Drive system	Tracks			
Drive speed	max. 1.8 mph	max. 1.9 mph		
Lowest operating temperature	-4 °F / (storage -40 °F)			
Starter battery / electric system	77 Ah / 12 V			
Sound power level, L_{WA}	101 dB (A)			
Max. outrigger force	4270 lbf (23 psi)	4720 lbf (26 psi)	4950 lbf (28 psi)	6070 lbf (33 psi)
Max. load under tracks	29 psi	30 psi	35 psi	41 psi
Vibration emission, a_{wmax}		0.06 g		
MEWP group classification	Group B, type 1			

2.2 Technical specifications (metric)

Leguan model	170	195	225	265
Working height	16.8 m	19.7 m	22.5 m	26.5 m
Max. platform height	14.7 m	17.6 m	20.4 m	24.4 m
Max. outreach @ 250 kg	8.0 m	8.9 m	9.1 m	10.9 m
Max. outreach @ 120 kg	8.9 m	9.9 m	11.2 m	13.6 m
Max. platform rated load	250 kg			
Max. wind speed	12.5 m/s			
Max. manual force	400 N			
Transport length	5.35 m	5.29 m	6.03 m	6.88 m
Transport length without platform	4.71 m	4.62 m	5.35 m	6.24 m
Transport height	2.15 m	2.16 m	2.20 m	2.28 m
Width	1.25 m			
Platform dimensions, W x L, 2 persons	1.33 x 0.75 m			
Platform rotation	± 55°			
Boom slewing	± 220°			
Gradeability	45 % (25°)			
Gradeability sideways	45 % (25°)			
Max. allowed levelling inaccuracy	1.0°			
Min. required space for outrigger set up	4.27 x 4.38 m			4.71 x 4.86 m
Max. gradient of slope for outrigger set up	25 % (14°)			23 % (13°)
Weight, depending on equipment	2530 kg	2700 kg	2920 kg	3920 kg
Drive system	Tracks			
Drive speed	max. 2.9 kph	max. 3.1 kph		
Lowest operating temperature	-20 °C (-40 °C)			
Starter battery / electric system	77 Ah / 12 V			
Sound power level, L_{WA}	101 dB (A)			
Max. outrigger force	19 kN (1.6 bar)	21 kN (1.8 bar)	22 kN (1.9 bar)	27 kN (2.3 bar)
Max. load under tracks	2.0 bar	2.1 bar	2.4 bar	2.8 bar
Vibration emission, a_{wmax}		0.06 g		
MEWP group classification	Group B, type 1			

2.3 Main dimensions and outreach diagram

2.3.1 Leguan 170

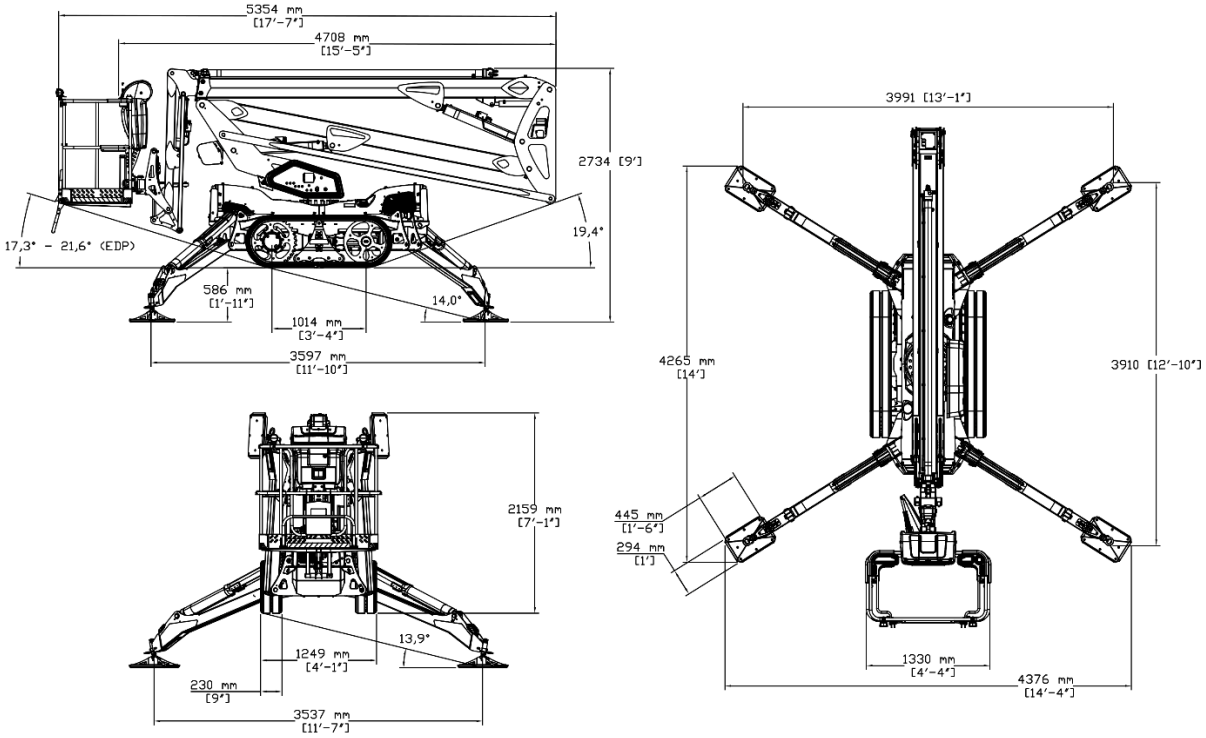

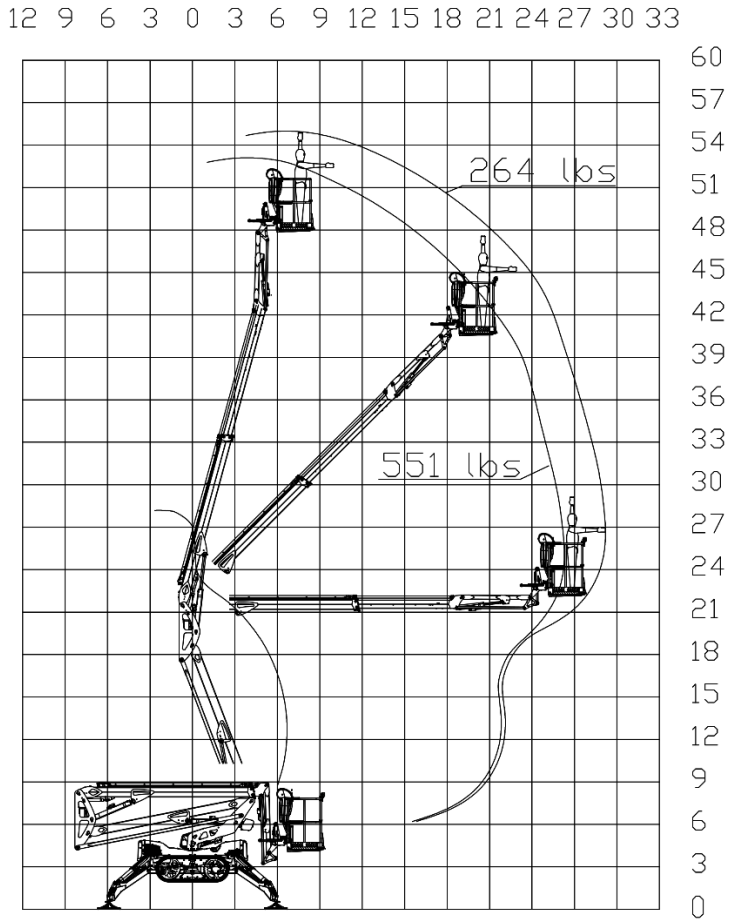

2.3.2 Leguan 195

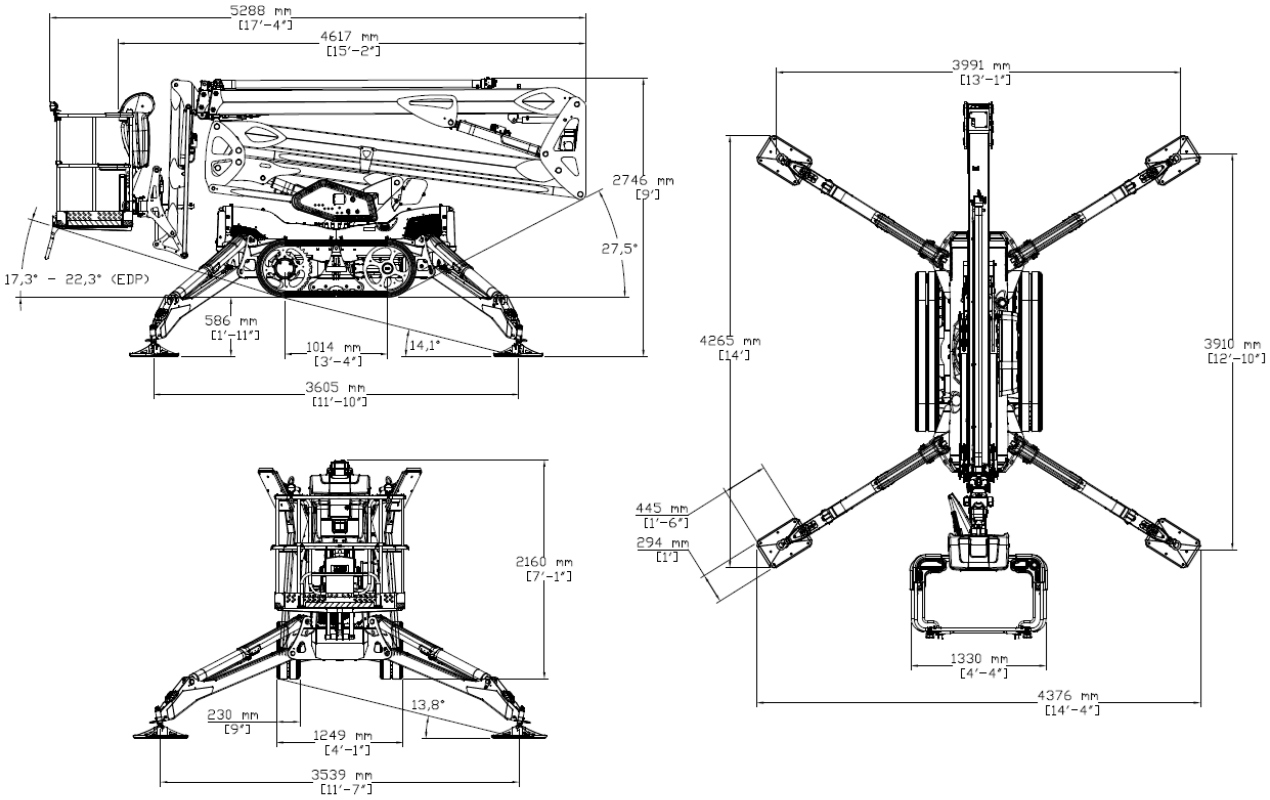

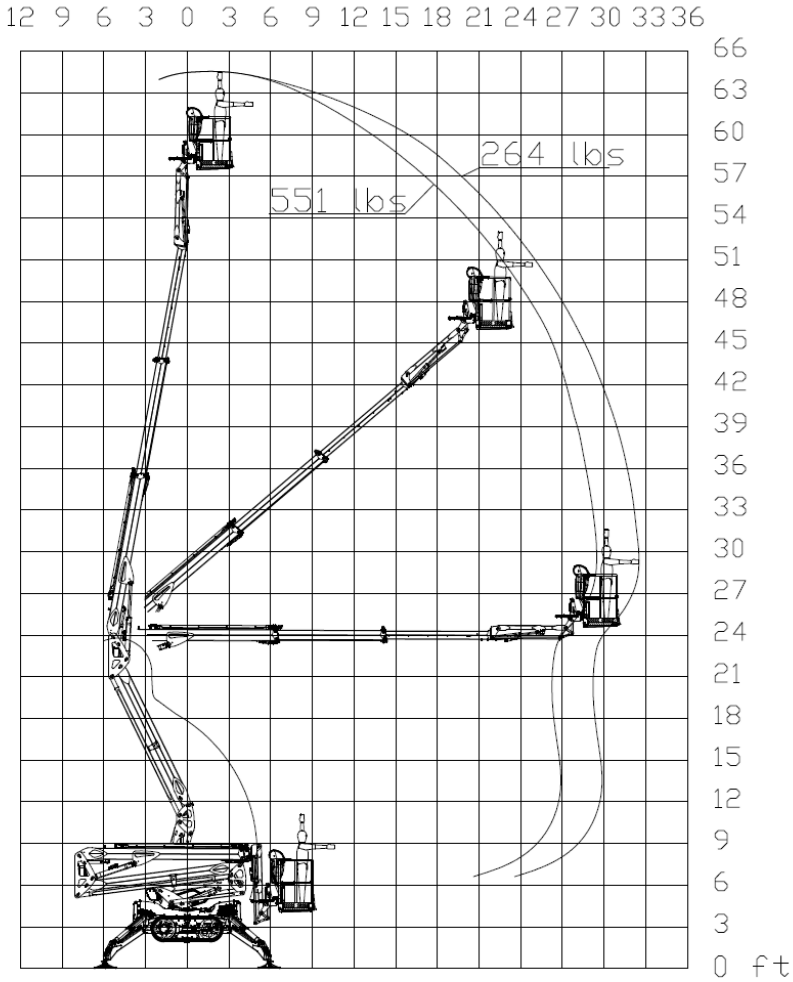

2.3.3 Leguan 225

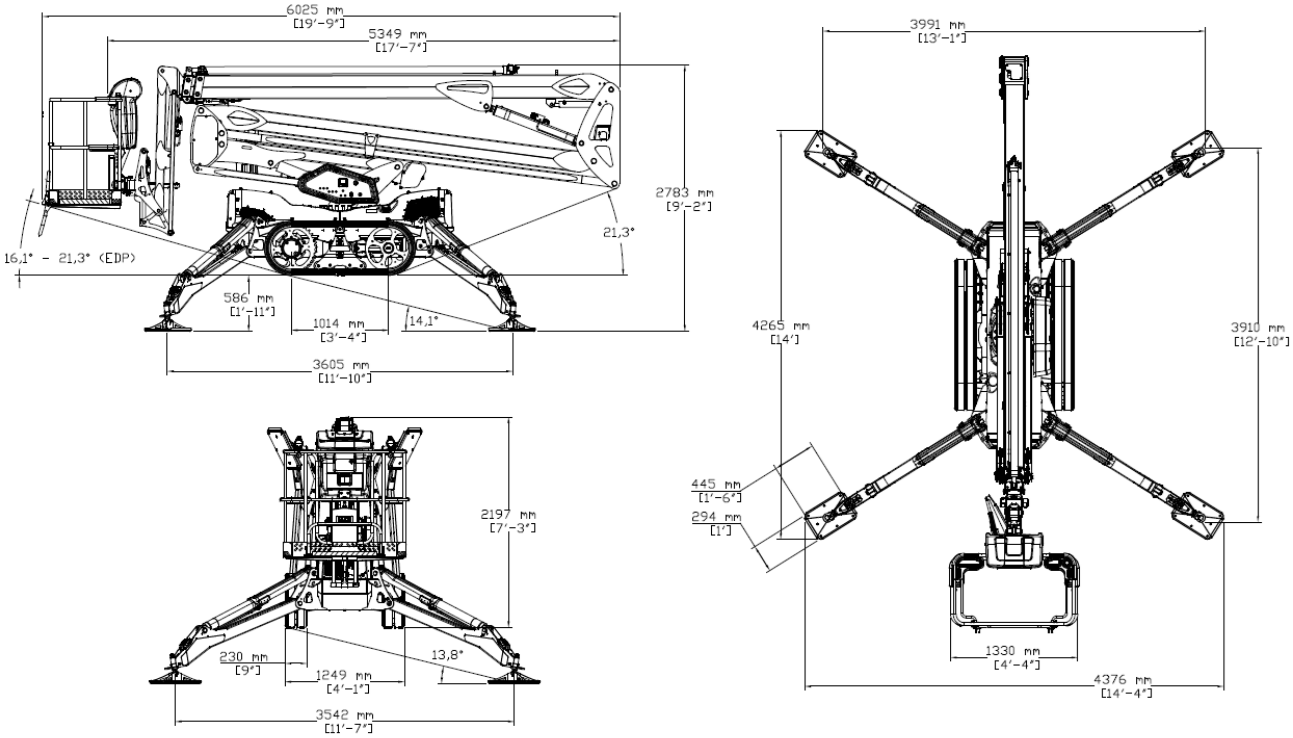

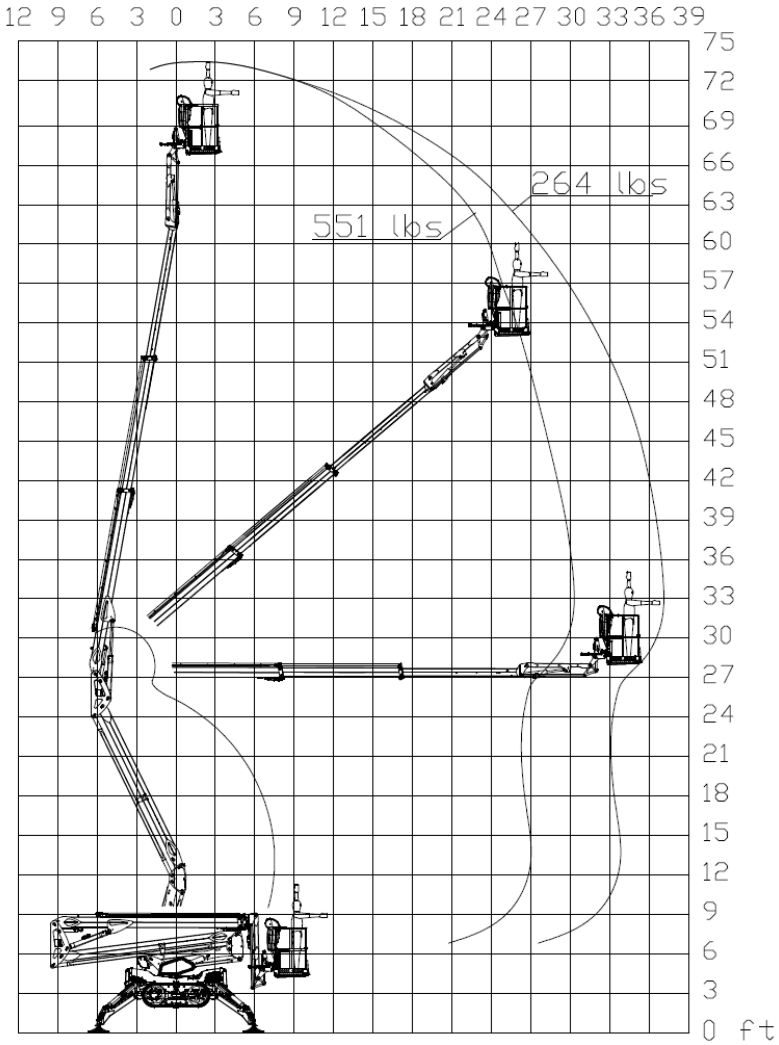

2.3.4 Leguan 265

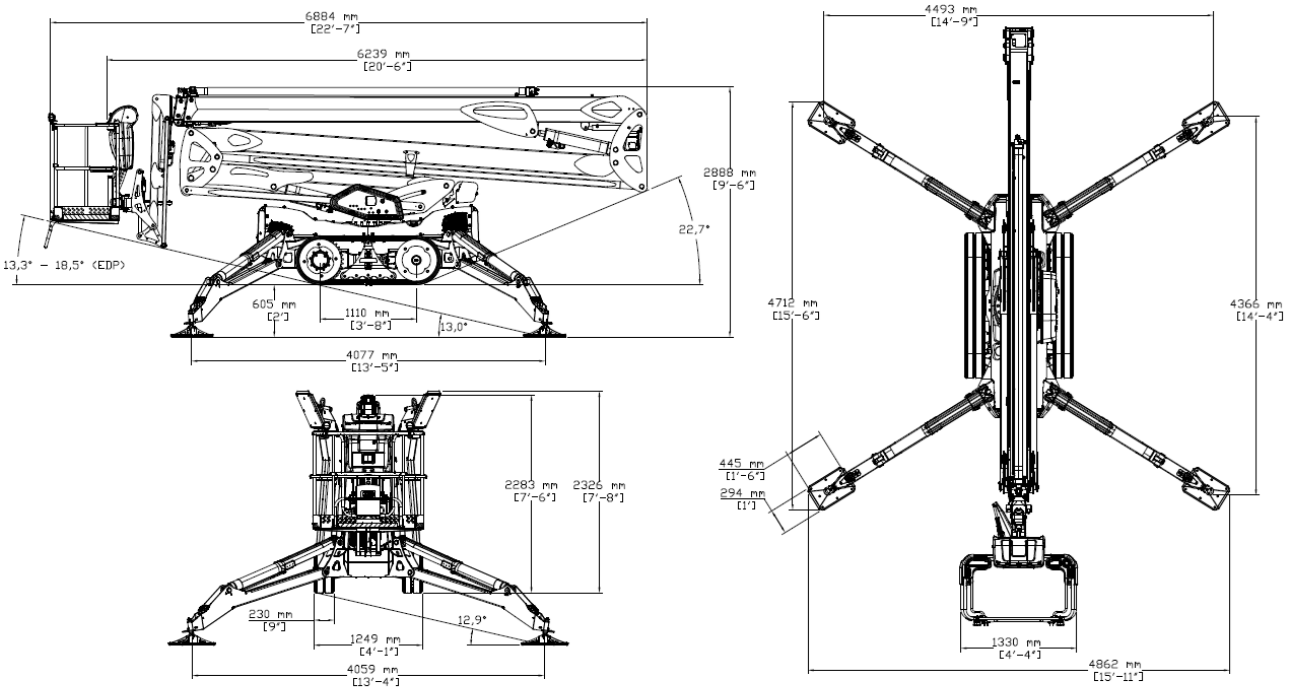

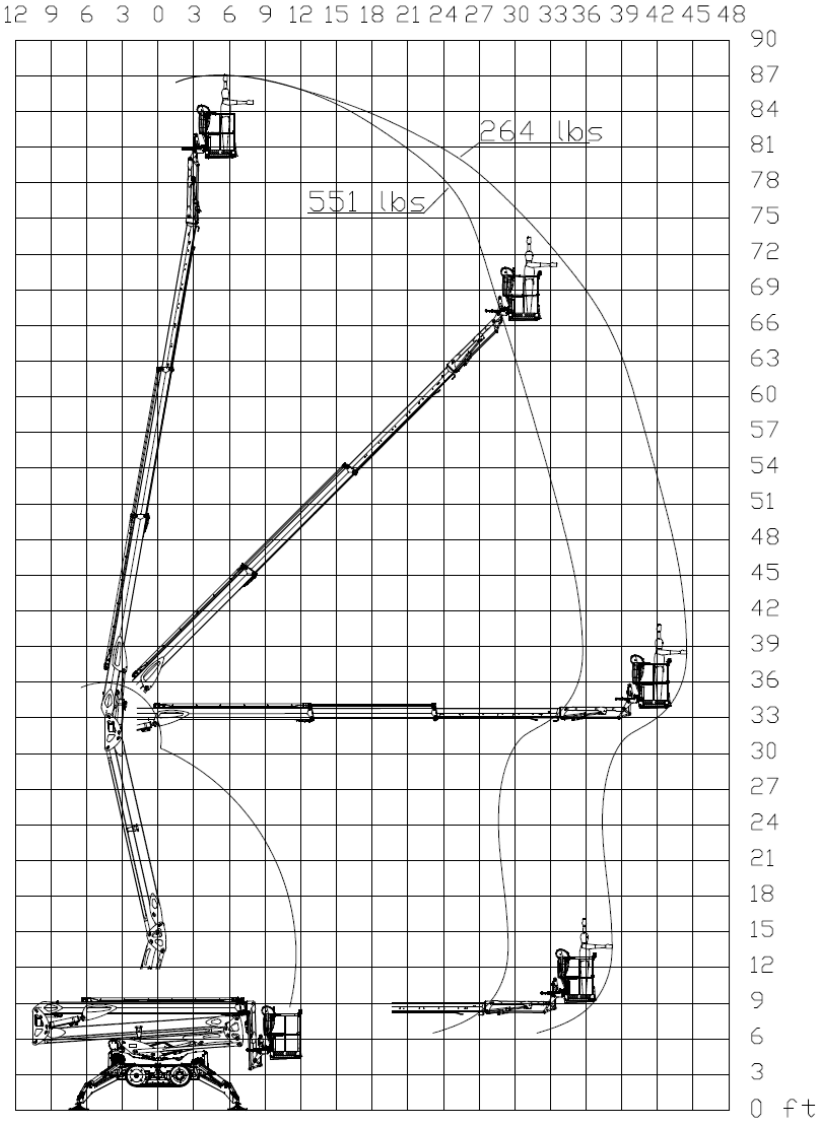

2.4 Signs and decals

1. Outrigger force and lifting points

2. Tie down points

3. Fuses (if equipped with electric motor)

4. Voltage (if equipped with electric motor)

5. Crushing of hands hazard

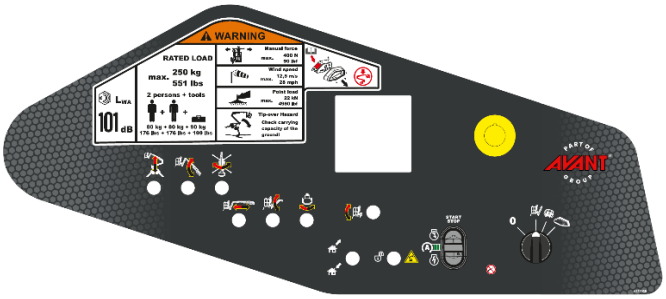

6. Lower control panel

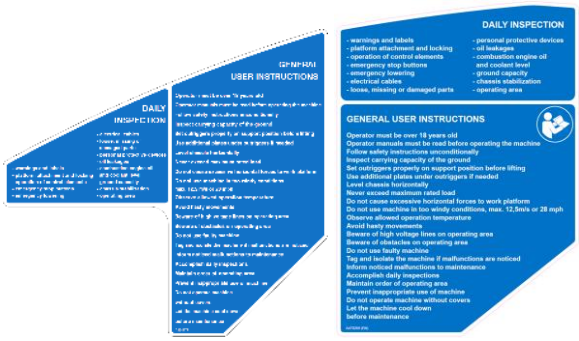

7. Daily inspection and general instructions

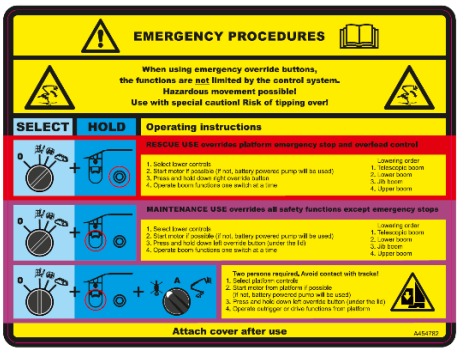

8. Emergency procedures

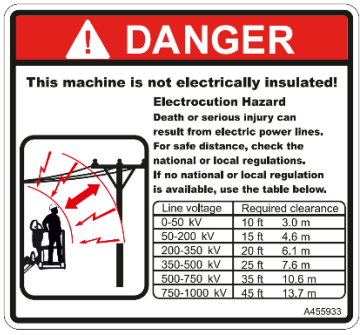

9. Distance from energized electric wires

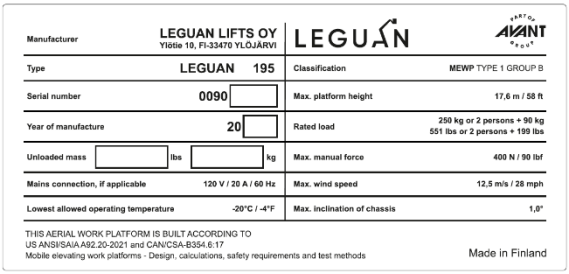

10. Type plate

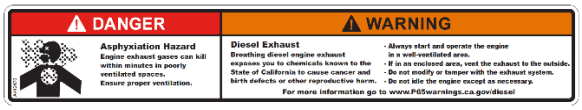

11. Asphyxiation Hazard

12. Crushing of hands hazard

13. Radio controlled (option)

14. Crushing of hands hazard

15. Notice

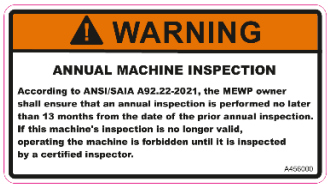

16. Annual machine inspection

17. Collision hazard

18. Platform control panel

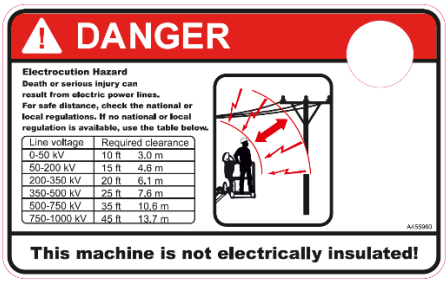

19. Distance from energized electric wires

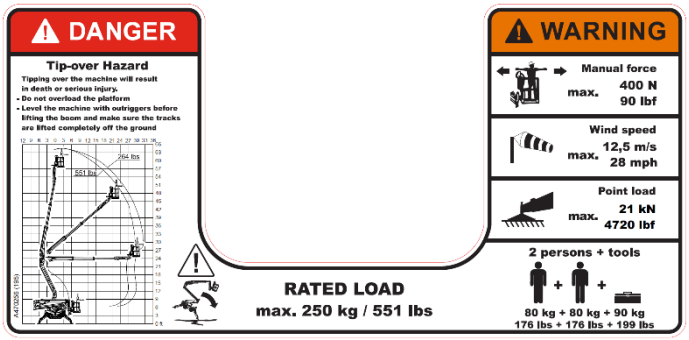

20. Maximum rated load

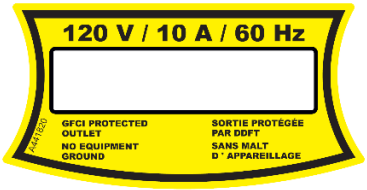

21. Outlet (option)

22. Close gate

23. Harness point

24. Operator manual

25. Collision hazard

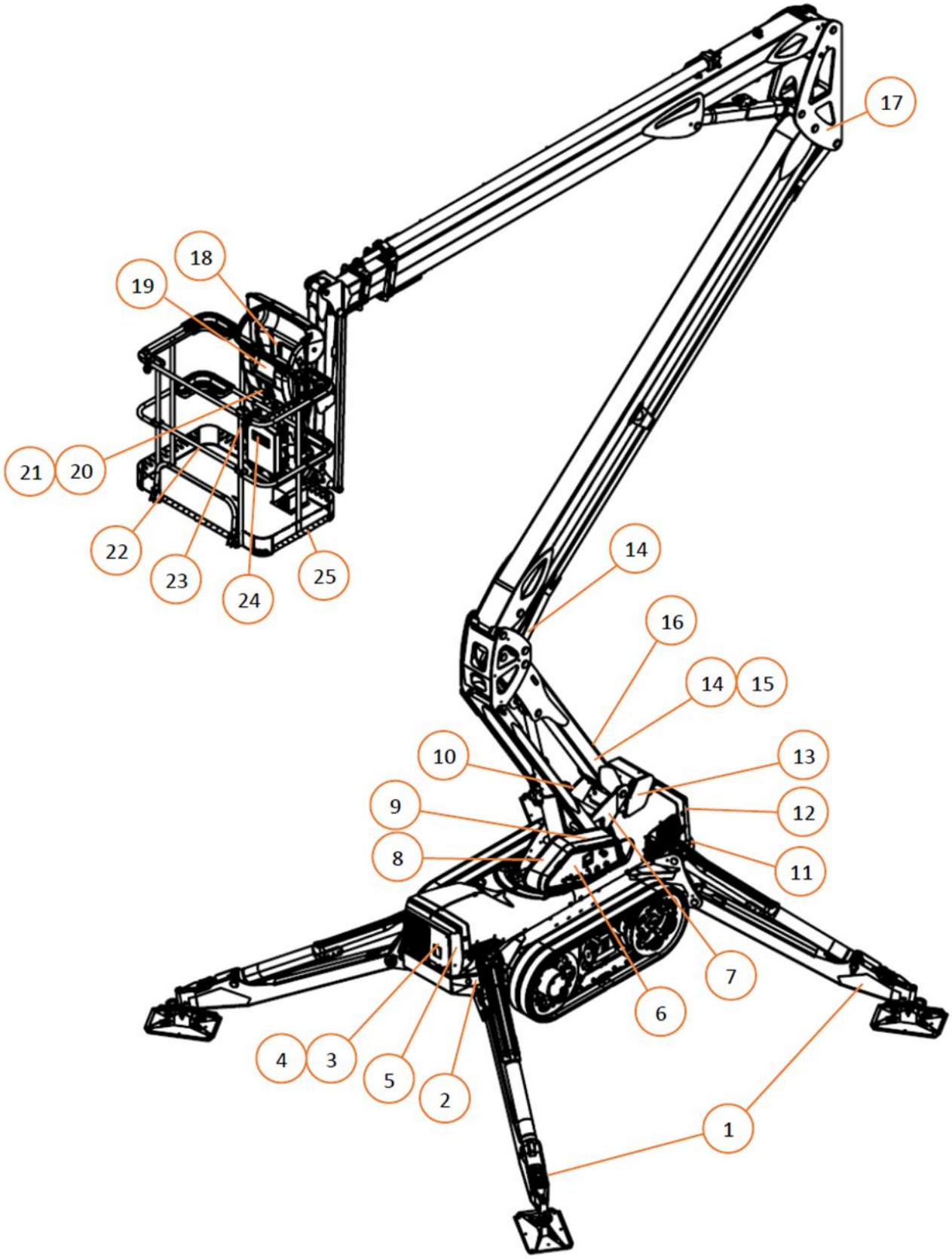

Figure 2. Signs and decals

3. SAFETY INSTRUCTIONS

The operator must know and follow all safety instructions. The operator must receive sufficient instructions in order to be able to use the lift correctly and safely. This Operators Manual must always be kept in the box on the platform.

In order to prevent unpermitted use of the access platform, the operator must take the ignition key that is located on the ground level with them after ending the operation.

DANGER

Electrocution Hazard!
Falling Hazard!

The access platform is not voltage insulated. Never use it near any voltage carrying parts of devices. Do not move any part of the access platform close to uninsulated cables or other voltage carrying parts or devices.

When working with the access platform, the operator(s) must always wear certified safety harness which is properly connected to the platform.

3.1 Before starting operation

WARNING

Risk of serious injury!

- The operator manual, all warnings and labels must be read carefully.
- Only persons with min. 18 years of age are allowed to use the access platform. They must have received sufficient operating instructions.
- Before handing the machine over to a third party, make sure that they are familiar with the instructions and operating the machine.
- Operator must know all the functions of this access platform as well as the maximum platform rated load, loading instructions and safety instructions.
- If there is heavy traffic in the working area, it must be fenced off widely enough and marked with a fence or with a line. Road traffic regulations must be followed as well.
- Make sure that there are no bystanders in the working area.
- Do not use faulty access platform. Inform about all faults and defects and make sure that they are repaired before starting operation.
- Follow check and service instructions and intervals.
- The operator must check this access platform visually at the beginning of each work shift. This check is necessary in order to make sure that the machine is all right before making the daily inspection prior to starting operation.
- If combustion engine is used indoors, make sure that the ventilation is sufficient.

3.2 Risk of tipping over

Tip-over Hazard!

- Maximum rated load (551 lbs / 250 kg), number of persons (2) and additional load on the platform must never be exceeded.
- When wind speed is equal or greater than 28 mph (12,5 m/s), the use of the access platform must be discontinued immediately, and the platform must be lowered down to transport position.
- Ensure that the access platform is used on dry, solid and level ground only. The ground is solid enough if it can carry min. 42 lbf/in^2 (3 kg/cm^2). On softer grounds use extra support plates under the outriggers.
- Do not use a ladder, chair, stool, scaffolding or by any other means try to increase reach capability of this access platform.
- In case the platform has got stuck or jammed, or it is too close to a building or a wall to be moved, do not try to release the platform by operating the controls. All persons must leave the platform first (with the help of a rescue service of fire brigade if necessary), only after that one can try to remove the cause of jamming externally.
- Do not increase the area of the platform or the load. Increasing of the area exposed to wind will weaken the stability of the access platform.
- Weight must be equally distributed on the platform. Make sure that additional weight cannot shift on the platform.
- Never use this access platform as a crane or an elevator. This access platform is intended for lifting of the max. allowed number of persons and additional load only.
- Do not drive on gradients that are steeper than the max. values given for this access platform and for the slope.
- Drive at safe speed on a steep terrain, especially when going downhill.
- Keep the outriggers close to ground when driving on rough or steep terrain.
- Pay attention to uneven spots on the terrain. These may cause a rocking motion of the machine which can lead to tipping over.
- Beware of the surrounding objects when driving with outriggers close to ground. Hitting an object with outrigger may damage the chassis of the machine.
- In order to ensure the safe operation of this access platform the manufacturer has conducted approved tests for the **LEGUAN** in accordance with the standard ANSI/SAIA A92.20 – 2021 dynamic fall arrest anchorage test in accordance with paragraph 5.1.4.1, static stability test in accordance with paragraph 5.1.4.2.1 and dynamic overload test in accordance with paragraph 5.1.4.3.

3.3 Risk of falling

Falling Hazard!

- The operator(s) must always wear certified safety harnesses when operating this access platform. The harnesses must be connected to the fastening point at platform mounting bracket.
- Do not stretch or reach out over the handrails. Stand steadily on the platform floor.
- It is not allowed to go to or step out from the platform when the booms are lifted.
- Always close the platform gate before starting operation.
- Keep platform floor clean.
- Do not drop or throw any material down from platform.

3.4 Risk of collision

Collision Hazard!

- Select the drive speed so that it is safe in regard to the ground conditions.
- The operator must follow all regulations concerning the use of safety equipment on the work site.
- When operating the lift, beware that visibility may be limited and trapping hazard.
- Make sure that there are no overhead obstacles on the work site that could prohibit lifting of the platform, or objects that might cause a collision.
- Do not operate this access platform in the working area of another overhead lifting device or similar equipment that is moving, unless this lifting device is secured so that there is no risk of collision.
- Beware of crushing hazard when holding the handrail of the platform in a possible collision situation.

3.5 Risk of electric shock

Electrocution Hazard!

- This access platform is not voltage insulated nor protected against contact with voltage carrying parts, or when approaching them.
- Do not touch the machine if it comes in contact with voltage carrying electric line.
- Persons on the platform or at ground level must not touch or operate the platform before power has been cut off from the electric line.
- During welding repairs, it is not allowed to use any part of this access platform as earth conductor.
- Do not use this access platform during thunderstorm or high winds.
- Leave clearance to electric lines taking into account movements of platform, movements of electric line, and high winds and gusts.

For safe distance, check the national or local regulations. If no national or local regulation is available, use the table below.

VOLTAGE	MIN DISTANCE
0 – 50 kV	10 ft / 3.0 m
50 kV – 200 kV	15 ft / 4.6 m
200 kV – 350 kV	20 ft / 6.1 m
350 kV – 500 kV	25 ft / 7.6 m
500 kV – 750 kV	35 ft / 10.6 m
750 kV – 1,000 kV	45 ft / 13.7 m

3.6 Risk of explosion/fire

WARNING

Explosion Hazard!

- It is not allowed to start the combustion engine / electric motor in a place where one can smell LPG, petrol, solvent or other flammable substance.
- Do not fill with fuel when the engine is running.
- Charge the battery only in places with sufficient ventilation, where there is no open fire or no works which could cause spark emissions (like welding).
- In case of fire it is recommended to use carbon dioxide fire extinguisher. Dry powder extinguisher can also be used but in this case the machine must be cleaned and inspected thoroughly because the powder is corrosive.

3.7 Daily inspection before starting operation

- warnings and labels
- platform attachment and locking
- operation of control elements
- emergency stop buttons
- emergency lowering
- electrical cables
- loose, missing or damaged pars
- personal protective devices
- oil leakages
- combustion engine oil and coolant level
- ground capacity
- chassis stabilization
- operating area

WARNING

If you note faults or missing equipment on this access platform, do not put it into operation before the faults have been corrected. Never set the access platform up in a place where the ground may be too soft. Beware of soft grounds and potholes in particular.

The operation of the access platform must be stopped if it has been in an accident or breakdown situation. The access platform must be inspected by an authorized Leguan service workshop before taking the machine back to operation.

3.8 Use of emergency stop switches

- Emergency stop switches are used by pressing down the red cap of the switch in emergency situations when normal shutting down procedures are not possible. For example in accidents and other dangerous situations involving the access platform or its user.
- Emergency stop switches shut down the engine.
- Emergency stop switches in upper (figure 3 (11)) and lower control panels (figure 4 (4)) can be used at any time.
- Emergency stop switches can be returned to neutral position by twisting its red cap clockwise.
- The emergency stop switch on remote control unit will only operate when the remote control use is selected.

3.9 Safety instructions for drive control

1. Do not exceed maximum inclination for drive.
2. Make sure the driving surface is solid.
3. Fasten tools and other materials to prevent them falling.
4. Wear safety harnesses and keep them fastened whenever operating the machine.

3.10 Defining the gradient of the slope

Measure the slope with a digital inclinometer or do as follows.

Required equipment: a water level, a straight piece of wood at least 3 ft / 1 m long and a measuring tape.

Place the wood on the gradient. Put the water level on the lower edge of the stick and lift the stick until it is in horizontal position. Keep the stick level and measure the distance from the lower end of the stick to the ground. Divide the distance (height) by the length of the wood stick (distance) and multiply the result by 100.

Example:
Wood length = 2 m
Height = 0.5 m
(0.5 / 2) * 100 = 25 % slope

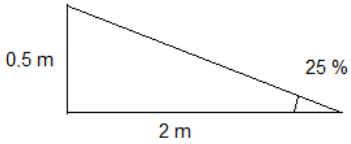

Wood length = 4 ft
Height = 1 ft
(1 / 4) * 100 = 25 % slope

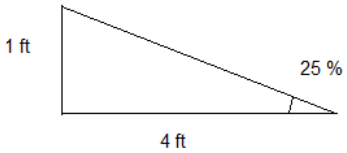

Risk of Tipping Over!

When crossing slopes always drive up or down the slope, not sideways. If you have to drive sideways on a slope, lower the downhill side outriggers so that they are close to the ground. This prevents the machine from tipping over.

4. CONTROLS AND SWITCHES

4.1 Controls in platform

Figure 3. Platform control panel

1. Diesel engine and electric motor start and stop buttons
2. Engine/motor running light
3. Automatic leveling buttons
4. Automatic leveling indication light (blinking) / boom operation allowed (continuously on)
5. Horn / platform work light switch
6. Speed selection switch
7. Mode selection switch
8. Platform tilt enable button
9. Back to work position / Home function switch
10. Emergency lowering button
11. Emergency stop switch (see 3.8)
12. Left joystick
13. Right joystick
14. Platform overload indicator light (see 4.1.1)
15. Dynamic outreach control indicator light (see 4.1.2)
16. Fault light (see 4.1.3)
17. Boom center position indicator light (see 4.1.5)
18. Boom transport position indicator light (see 4.1.6)
19. Low fuel level indicator light (see 4.1.7)
20. Inclination indicator light (see 4.1.4)

4.1.1 Platform overload indicator light

Tip-over Hazard!
Never overload the platform!

This access platform is equipped with automatic platform overload system which prevents all boom movements in case the 551 lbs (250 kg) rated load is exceeded. Should this happen, there is an audible warning signal and an indicator light up at the control panel (figure 3 (14)).

If platform overload goes on while platform is moving, movement is allowed at a restricted speed, until the overload is removed. If platform overload goes on while the platform is stationary, all movements are disabled until overload is removed.

4.1.2 Dynamic outreach control indicator light

This access platform is equipped with dynamic outreach control. Outreach depends on the actual load on the platform.

- Red dynamic outreach control signal light (figure 3 (15)) will blink, and an audible sound alarm can be heard when the telescope boom is about to reach the current maximum outreach.
- The frequency of the blinking light as well as the audible sound will increase as the telescopic boom closes the maximum outreach.
- When the maximum outreach is achieved, a long continuous audible sound can be heard, the red light will stay constantly on and telescope out movement is prevented.
- If the upper boom is moved down while the telescope is at maximum outreach, then the telescope boom will be automatically moved in keeping the outreach within allowed limits.

4.1.3 Fault light

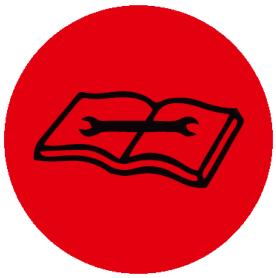

The fault light (figure 3 (16)) will signal errors and faults on the equipment. If the fault light comes on:

- Ensure neither emergency stop button is pushed down.
- If the emergency buttons are not active, return booms on their transport supports, stop working with the equipment and contact your local authorized Leguan service workshop.

Fault light BLINKS frequently:

- Can-bus connection has been lost to the upper control panel.
- Use emergency override system (see 6.4) to return booms back to transport position, stop working with the equipment and contact your local authorized Leguan service workshop.

Possible errors and faults can be diagnosed with the display which is located at the lower control panel.

4.1.4 Inclination indicator light

Tip-over Hazard!

Do not reach, slew or lift the booms when the inclination alert light is on!

This access platform is equipped with inclination sensor which alerts when the inclination of the chassis exceeds the given limits during boom operation or driving. During the inclination alarm, the access platform gives an audible signal and the orange indicator light (figure 3 (20)) will blink.

If the inclination alarm is activated during drive functions, drive the machine to more even surface.

If the inclination alarm is activated during boom functions, move the booms CAREFULLY to transport position, check the ground carrying capacity and check the condition of outriggers and outrigger cylinders. Level the machine again or contact your local authorized Leguan service workshop if required.

4.1.5 Boom center position indicator light

The boom center position indicator light (figure 3 (17)) is constantly on when the boom slewing is in center position. The indicator light blinks when it is close to the center position. The indicator light is only an aid and does not guarantee that the booms are exactly centered. It is recommended to use Home function (see 5.5.3) to move booms to transport position.

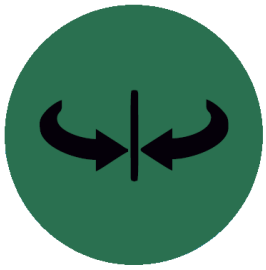

NOTICE

Always visually ensure that the booms are properly placed on their transport position!

4.1.6 Boom transport position indicator light

The position of all booms is measured with sensors. Boom transport position indicator light (figure 3 (18)) is constantly on when all booms are properly placed in transport position and telescope boom is in. The indicator light blinks when the boom is in elevated driving position (see 5.3.1).

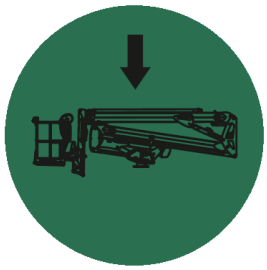

4.1.7 Low fuel indicator light

Low fuel level indicator light (figure 3 (19)) will be lit when there is approximately 4 liters of fuel left in the tank. It will be enough for approximately one hour of constant operation depending on the load on the engine.

Fuel tank capacity is 19 liters.

When the low fuel indicator light is lit, refuel as soon as possible (see 9.6).

4.2 Lower control panel

Figure 4. Lower control panel

1. Ignition key switch / control position selection
2. Diesel engine and electric motor start and stop buttons
3. Engine/motor running light
4. Emergency stop switch (see 3.8)
5. Display
6. Lower boom control switch
7. Upper boom control switch
8. Boom slewing control switch
9. Telescope boom control switch
10. Jib-boom control switch
11. Platform rotate control switch
12. Platform tilt control switch
13. Back to work position / Home function control switch
14. Safety switch / emergency lowering switch

4.3 Wireless remote control (option)

This access platform can be equipped with wireless remote control as an option. The remote controller can be used to operate outriggers and drive functions. The remote controller, spare battery and battery charger are located inside the storage enclosure on the pedestal underneath the 2nd lower boom.

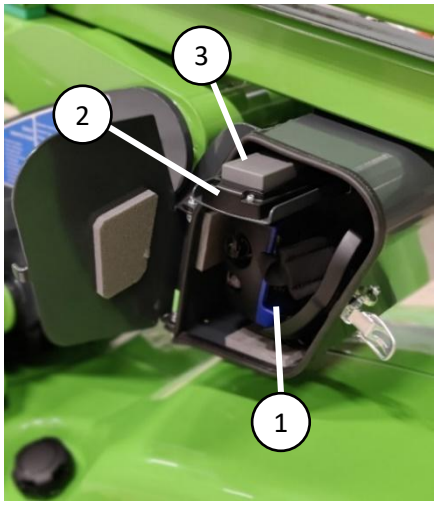

Figure 5. Remote controller storage enclosure

1. Remote controller
2. Spare battery
3. Battery charger

Protect the remote controller from snow and ice. Keep the remote controller inside the storage enclosure when it is not used. The minimum temperature for the remote controller storage and use is -4 °F (-20 °C), store the remote controller indoors if necessary.

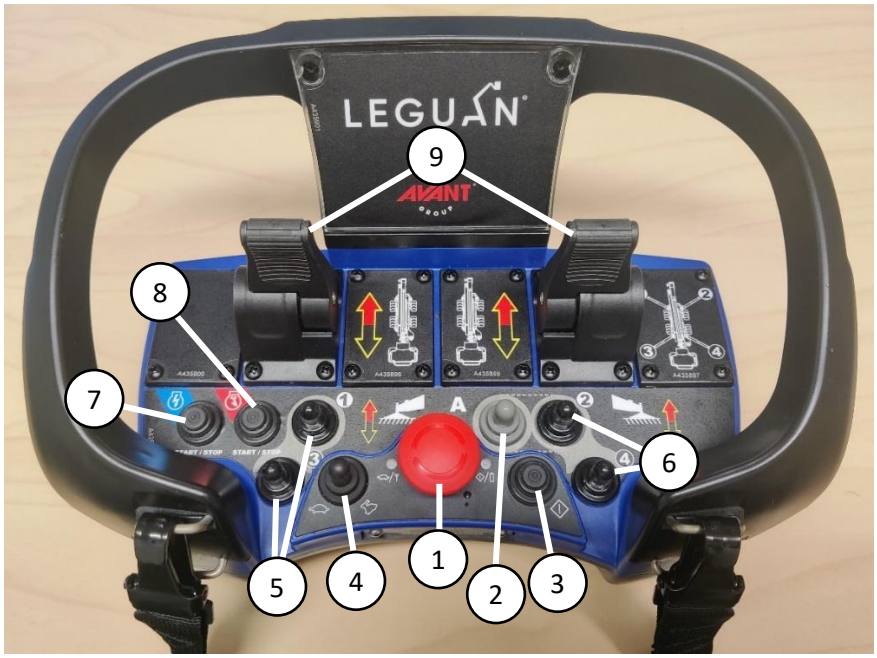

Figure 6. Remote controller

1. Emergency stop button (will only operate when the remote control use is selected)
2. Automatic leveling switch
3. Start button for the remote controller
4. Drive speed selection switch
5. Outrigger control switches, left-hand side outriggers
6. Outrigger control switches, right-right side outriggers
7. Electric motor start/stop button
8. Diesel engine start/stop button
9. Drive control levers

4.4 120 V connection and switches

Leguan can be powered by an electric motor as an option. The motor must be connected to a 120 V / 60 Hz / 20 A outlet. Connections and switches pictured below.

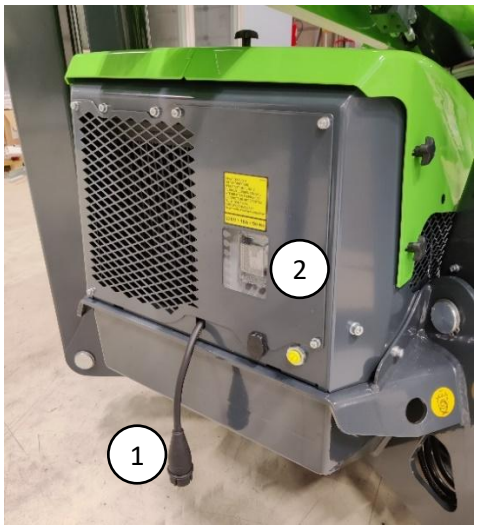

1. 120 V / 60 Hz / 20 A connection lead
2. Fuses

Figure 7. 120 V connections

The fuses must be up to have the 120 V devices working. The fuse on left-hand side (1) is for the electric motor and the battery charger. The fuse on the right-hand side (2) is for the outlets in the work platform.

Figure 8. Fuses

5. OPERATION

An access platform is destined for lifting of persons and their equipment only. It is not allowed to use an access platform as a crane.

NOTICE

It is the operator's responsibility to understand and follow all operating and safety instructions.

1. Set the key in the ignition key switch and select the desired control position. The access platform can only be controlled from one pre-selected control position only.
2. If the electric motor is to be used, connect 120 V cable to the machine.
3. Unplug the engine heater cable (option) if it is plugged.
4. Make sure that the booms are down on the transport position.

The machine's control system performs the platform control panel indicator light test sequence when the key switch is activated and the machine turns on. The test sequence is also performed when the emergency stop button is released to the up position.

5.1 Starting the combustion engine / electric motor

Read carefully this Operators Manual and perform daily inspection before starting operation. Read and understand all safety instructions before starting operation.

NOTICE

Do not use the emergency stop button to turn off the engine / electric motor. Always use the start/stop button to turn off the engine / electric motor.

When using the electric motor, use an extension cord with a maximum length of 65 ft (20 m) and minimum wire cross sectional area of 12 AWG (4.0 mm^2). Buildings' fixed electrical wiring may affect the functioning of the electric motor.

5.1.1 Combustion engine

1. Select control position.
2. Press the combustion engine start button. The button doesn't need to be held down.
3. The start button green light will turn on, the engine glow will be used for required time and the engine starts automatically.
4. Press the start/stop button again to stop the engine.

The access platform will automatically determine proper glow time (max. 15 s) depending on the outdoor temperature and the engine will start automatically after the glow function. In case the engine will not snot start on the first try, push the start button again.

5.1.2 Electric motor

1. Select control position.
2. Press the electric motor start button. The button doesn't need to be held down.
3. Press the start/stop button again to stop the motor.

5.1.3 Start-stop function

The access platform is equipped with automatic start-stop function. The combustion engine rpm is lowered to idle and electric motor is stopped when there aren't any movements done with the machine. When the engine is idling, the engine run light between the start/stop buttons is blinking. The engine/motor will wake up from idle automatically when movements are done again. If the hydraulic oil temperature is high and the oil cooler fan in active, the electric motor start/stop function is disabled.

5.2 Speed selection switch

The access platform is equipped with 2 speed ranges for boom movements and drive control. The speed selected from the switch will determine the maximum operational speed. The speed is selected by turning the switch to the desired position.

5.3 Drive control

When transferring the platform, pay attention to the following factors:

1. Do not exceed the maximum inclination for the drive. Make sure the driving surface is solid.
2. Secure tools and other materials to prevent them from falling or shifting.
3. Operator should wear safety harnesses and keep them fastened whenever operating the machine. Follow your local rules and regulations regarding safety harnesses in access platforms!
4. Move the joystick in a controlled manner: avoid sudden movements and drive at a safe speed.
5. Always try to drive straight towards a hill.
6. Keep the outriggers close to ground when driving on rough or steep terrain.
7. Beware of hitting the surrounding objects with the machine.

To drive the machine:

1. Switch on the machine and select platform controls.
2. Start the combustion engine or electric motor.
3. Ensure that the booms are in transport position and the outriggers are off the ground.
4. Ensure that the drive speed selection is in the desired position.
5. To drive the machine: grab and squeeze the right-hand side joystick to hold down the joystick enabling button on the frontside of the joystick. To move forward, push the joystick forward and to reverse, pull the joystick backward. To turn the machine left or right, push the joystick to the desired direction.

On slow speed selection, the access platform can be turned on the spot by pushing the joystick in approximately 40-degree angle towards left or right, either forwards or backwards depending on the desired turning direction.

On fast speed selection, only wide gentle curves are possible to leave as minimal mark on the ground as possible. Hydraulic power is limited on fast speed to prevent sudden movements. Use slower drive speed on difficult terrain.

NOTICE

The access platform can only be driven when all booms are in transport position!

Learn how to drive with the machine at a low speed. Operate the joystick smoothly to avoid abrupt and jerky movements. When driving, pay special attention to stability and the dimensions, especially the length of the machine.

TOWING THE ACCESS PLATFROM IS FORBIDDEN, RISK OF DAMAGE!

5.3.1 Elevated driving position (EDP)

This machine can be driven with the boom in a slightly elevated driving position. This function can be used for example to exceed an obstacle or drive on a trailer. The function allows raising the upper boom about 30 cm from its transport position without deploying outriggers. Travel speed is restricted in the elevated driving position. Also lifting outriggers with automatic function is disabled.

To use elevated driving position from platform:

1. Turn mode selection switch (figure 3 (7)) to boom control position.
2. Use the right hand joystick to move the upper boom.
3. Return the boom to transport position immediately after exceeding the obstacle.

To use elevated driving position with remote control:

1. Select lower controls.
2. Move the upper boom by using lower controls.
3. Select remote control.
4. Return the boom to transport position immediately after exceeding the obstacle.

WARNING

Risk of tipping over!

Using the elevated driving position will move the machine's center of gravity higher.
Elevated driving position should be used only if necessary!

5.3.2 Features of tracked access platform

Certain things regarding working and working environment must be taken into account. In order to achieve the maximum lifespan for the rubber tracks and the crawler track chassis, follow the instructions below.

The lifespan of the track system of an access platform on rubber tracks is heavily dependent on the working environment and the way of working. If the access platform is being used in terrains with stones or gravel, on demolition sites where there is concrete, or in an environment with scrap metal, the lifespan of the track system can be significantly reduced.

In order to extend the lifespan of the track system, avoid driving on the following terrains or work sites.

- **Environments with crushed stone, iron bars, scrap metal or similar recycling material.** Rubber tracks are not designed for this kind of environments.
- **Daily/continuous driving on asphalt or concrete.** Continuous operation on these surfaces will shorten the lifespan of rubber tracks.
- **Work sites with sharp objects, like broken stones or concrete waste.** This kind of sharp objects can cut or damage the rubber tracks permanently. Conditions which can damage tyres can also damage rubber tracks. Damaged tracks cannot normally be repaired, they must be replaced.
- **Work sites with corrosive substances (fuels, oil, salt or fertilizers).** Corrosive substances can oxidize the metal parts in rubber tracks. If such substances come in contact with the surface of the rubber track, the tracks must be flushed with water immediately after ending operation.

Damages on the tracks, track rollers or crawler track chassis, caused by operation in such environments, are not covered by warranty.

Operating instructions for an access platform with tracked chassis:

- **Change turning direction as often as possible.** Turning continuously only in one direction will cause uneven wear of the sprocket and the rubber track.
- **Check condition of the track system regularly.** Excessive wear on the rollers, idlers, sprockets and bearings can damage the tracks.
- **Avoid driving sideways on a gradient.** Always drive the slopes straight up and down and turn on flat even surface only. Continuous operation on uneven terrains or driving sideways on a gradient causes wear in the track guides and rollers and makes tracks jump off the sprockets.
- **Avoid continuous sharp turns.** By making wider and more gentle turns it is possible to avoid unnecessary wear of the tracks and/or tracks jumping off the sprockets.
- **Avoid driving with one track on level surface and one track on a gradient.** Always drive on an even surface. If the tracks bend continuously from the inside or from the outside during operation, the metal structure of the tracks can break.
- **Ensure that the tracks are tightened correctly.** Loose track will easily come off the sprocket at turns.

NOTICE

Always ensure that rocks, gravel, snow or other materials don't build up between the rubber track and the track wheels. Risk of damage to the track chassis!

5.4 Operation of the outriggers

Tip-over Hazard!

Booms must not be operated without properly deployed outriggers!

The outriggers must be deployed, and the chassis of the access platform must be levelled before any boom operations. The chassis can be levelled by either using automatic levelling function or controlling individual outriggers manually. The maximum allowed levelling inaccuracy is 1.0°.

Make sure that the ground carrying capacity under every outrigger is enough – put extra plates on the ground if necessary.

Crushing Hazard!

Always pay attention to surroundings when operating the outriggers. Make sure there are no persons or items between the outriggers and ground/machine!

5.4.1 Automatic leveling

Automatic leveling function will deploy all outriggers against ground, lift the chassis off the ground and level the chassis automatically.

Set-up:

1. Press the lower button of the automatic leveling switch (figure 3 (3)) and hold the button down.
2. The access platform will deploy all outriggers and level the chassis automatically.
3. While the leveling is in progress, the green light of the automatic leveling will blink.
4. When the chassis is leveled, the green light of the automatic leveling (figure 3 (4)) will stay on continuously.
5. Make sure that the tracks are lifted off the ground. If necessary, push the automatic leveling button again so the machine will level itself higher.

Setting the outriggers to transport position:

1. Lower all booms to transport position and make sure telescope boom is also in. It is recommended to use Home function (see 5.5.1) to lower the booms.
2. The green indicator light of boom transport position (see 4.1.6) must be lit.
3. Press the upper button of the automatic leveling switch (figure 3 (3)) and hold the button down.
4. The button can be released even before the outriggers are completely up. The drive functions can be used when the outriggers are slightly off from the ground.
5. If the outriggers need to be driven in their transport positions, press and hold down the upper button of the automatic leveling switch until all outriggers reach their transport positions.

5.4.2 Outrigger manual operation

1. Select platform controls.
2. Start electric motor or combustion engine.
3. Turn and hold the mode selection switch to chassis control position (figure 3, switch 7).
4. Select the desired outrigger(s) to be operated by moving the left side joystick to the direction of the outrigger(s) and move the outrigger(s) by pressing the buttons on top of the joystick (left-hand side button moves the outriggers down and right-hand side button moves them up).
5. Move the rear outriggers down to ground contact.
6. Move the front outriggers down to ground contact.
7. Move the outriggers down enough to raise the tracks visually off the ground.
8. Level the chassis by moving two outriggers at a time (for example two rear outriggers or two left-hand side outriggers at the same time).
9. When the chassis is leveled, the green light in the middle of the automatic leveling switch will be lit constantly (figure 3, light 4). The light will be blinking if all the outriggers are on ground, but the chassis isn't leveled.

WARNING

If the green light in the middle of the automatic leveling switch is on without the outriggers being on ground, the access platform must not be used! Contact your local authorized Leguan service workshop.

The boom operations must not be done without properly deployed outriggers!

5.5 Operation of the booms

The booms can be operated when all four outriggers are properly deployed, and the chassis of the access platform is leveled. The green light of the automatic leveling switch (figure 3 (4)) will stay constantly on when these conditions are met. The overload control system (4.1.1) will prevent the operation of booms if the maximum rated load of 551 lbs (250 kg) is exceeded.

Operate the booms from the preselected control position. The lower control panel has individual switches for all boom controls (figure 4, switches 6-12). To operate the booms from the lower control switches, also the safety switch (figure 4, switch 14) must be activated to the left-had side position.

The platform control has all boom controls on the two joysticks.

Left-hand side joystick:
- Moving the joystick forward/backward will move the lower boom up/down.
- Moving the joystick left/right will rotate the platform left/right.
- Pressing the buttons on top of the joystick will move the jib-boom up/down.

Right-hand side joystick:
- Moving the joystick forward/backward will move the upper boom up/down.
- Moving the joystick left/right will move the boom slewing left/right.
- Pressing the buttons on top of the joystick will move the telescope boom out/in.

All the boom movements are controlled proportionally, so the movement speed is dependent on the joystick activation amount. To move the booms slower, keep the joystick closer to the center position and to move them faster, move the joystick further out.

The platform self-leveling system keeps the platform leveled automatically. If the platform tilting needs to be operated from platform controls, press the platform tilting button (figure 3, button 8) and move the right-hand side joystick forward/backward to tilt the platform up/down. Operate the platform tilting carefully, especially when the booms are up.

5.5.1 Home function

Home function autonomously returns the booms to transport position. From platform controls the function is activated by holding the Mode selection switch (figure 3, switch 7) clockwise in boom position and turning the Back to work position / Home function switch (figure 3, switch 9) clockwise and holding it there. From lower controls the function is activated by holding the safety switch (figure 4, switch 14) to left-hand side and the back to work position / home function switch (figure 4, switch 13) to down position. The function will stop if the switch is released.

When the home function is in use, the boom transport position (figure 3 (17)) and boom center position indicator lights (figure 3 (16)) will flash alternately. When the home function is complete, there will be an audible signal and boom transport position and boom center position indicator lights will stay constantly on.

Always pay attention to surroundings when using the home function as it will not use the same route as when moving the booms with joysticks.

5.5.2 Back to work position

Using the Back to work position switch (figure 3, switch 9) counterclockwise from platform controls and holding the Mode selection switch (figure 3, switch 7) clockwise in boom position, the booms will autonomously return to the position where the home function was used the last after operating the joystick. From lower controls the function is activated by holding the safety switch (figure 4, switch 14) to left-hand side and the back to work position / home function switch (figure 4, switch 13) to up position. The function will stop if the switch is released.

When the back to work position is in use, the boom transport position (figure 3 (17)) and boom center position indicator lights (figure 3 (16)) will flash alternately. When the back to work position is complete, there will be an audible signal and boom transport position and boom center position indicator lights will flash.

Pay attention to surroundings when using the back to work position as it will not use the same route as the home function.

5.6 Remote control (option)

1. Select remote control by turning the key switch (figure 4 (1)) to remote control position and take the remote controller out of the storage enclosure (4.3).
2. Release the emergency stop button on the remote controller (figure 6 (1)).
3. Turn on the remote controller (figure 6 (3)).
4. Start the engine or electric motor (figure 6 (7 or 8))
5. Select the drive speed (figure 6 (4)).
    - Pressing the switch to left-hand side reduces the drive speed. The green indicator light above the switch will start to blink.
    - Pressing the switch to right-hand side will select the fastest drive speed. The green indicator light above the switch will not be lit at all.
6. Use drive or outrigger functions.
    - Drive is operated the two levers (figure 6 (9)).
    - Outriggers can be controlled with either the automatic leveling switch (figure 6 (2)) or one at a time with individual control switches for the left-hand side (figure 6 (4)) or the right-hand side (figure 6 (5)).
7. To stop, turn off the engine/motor using either the electric motor or combustion engine start/stop button. Turn off the remote controller by pressing the emergency stop button on the remote controller.
8. Place the remote controller inside the storage enclosure (4.3).
9. Turn the ignition key switch to ”0” position.

The emergency stop on the remote controller is only operational when the remote control is selected as the active control position.

5.7 Ending the operation

After ending the operation:

1. Lower the booms to transport position.
2. Lift the outriggers completely up to transport position.
3. Stop the combustion engine / electric motor by pressing the start/stop button.
4. Remove the safety harness from the platform.
5. Turn the ignition key switch to ”0” position and remove the key from the switch.
6. If the machine stays in a place where it can be connected to 120 VAC mains, it is recommended to leave it connected to charge the battery.

NOTICE

Prevent the unauthorized use of the access platform by removing the key switch when it isn’t used!

5.8 Additional instructions for winter use

The minimum allowed operating temperature for the access platform is -4 °F (-20 °C).

Do the following actions during winter time:

- Check that the limit switches are free from snow, ice and dirt.
- If the ambient temperature is below 36 °F (+2 °C), it is recommended to use a separate engine heater (option). The engine heater cable can be connected to the platform side of the chassis.
- Let the engine run for a few minutes before moving the machine.
- First use drive mode for a while, then use outriggers and lastly use the booms. This way the oil in the whole system heats up and warm oil flows to the cylinders.

6. EMERGENCY LOWERING AND EMERGENCY BYPASS

Tip-over Hazard!

Emergency lowering and emergency bypass must only be used in emergency and fault situations with extreme caution!

If the operating power supply cuts off (fuel running out, power outage or damage to the extension cord) the booms can be lowered using one of the following backup systems.

6.1 Emergency lowering

The access platform is equipped with emergency lowering system that enables boom operation to transport position if primary power supply has failed. Emergency lowering system uses the backup pump and electric emergency lowering valves that are located on the cylinders, so all the boom movements can be operated. Emergency lowering gets power supply from the starter battery, so it needs to have sufficient charge. The starter battery must be charged if the charge is low.

Operation of the emergency lowering:

1. Turn off the combustion engine / electric motor.
2. Press and hold the emergency lowering switch from the active control position.
3. Use the desired boom operations or Home function.

The backup pump can only be used 2 min continuously at max pressure after which it will require approximately 30 min to cool down completely. The operating time is limited by the control system which will disable the backup pump when the time limit is reached. The operation of the backup pump is enabled again when there is at least 30 seconds of operating time available (approximately 7 min 30 sec cooldown). If the duty cycle is higher than this, the pump can overheat and get damaged.

Emergency lowering doesn’t bypass any safety functions, so it cannot be used in for example overload situations.

NOTICE

Always check the operation of emergency lowering before starting operation.

6.2 Backup operation

In addition to emergency lowering, the access platform is equipped with backup operation system which enables the operation of all the movements (drive, outriggers and booms) using the backup pump. The backup operation can only be used from the platform controls.

Backup operation of drive or outriggers:

1. Make sure that platform control is the active control position.
2. Turn off the combustion engine / electric motor.
3. Turn and hold the mode selection switch (between joysticks, figure 3, switch 7) to drive / outrigger position (left-hand side).
4. Use the left-hand side joystick to operate outriggers or the right-hand side joystick to drive the machine.

Backup operation of booms:

1. Make sure that platform control is the active control position.
2. Turn off the combustion engine / electric motor.
3. Turn and hold the mode selection switch (between joysticks, figure 3, switch 7) to boom position (right-hand side).
4. Use both joysticks to operate the boom movements.

The backup pump is much smaller than the pump on the combustion engine or electric motor, so the movements are much slower when using that. The duty cycle of the backup operation is the same as the emergency lowering (6.1).

6.3 Platform load control override

Tip-over Hazard!

For possible emergency situations the access platform is equipped with load control override button (figure 9 (A)). The button must only be used in **extreme emergency situations**, for example the operator has lost consciousness in the platform and must be lowered for their safety. The platform must be moved to directions that decrease the overturning moment (towards the center of the machine). **The manufacturer is not responsible for misuse of the function!** The override button is located on the left-hand side of the lower control panel and is only operational when lower control is selected as the active control position.

Operation of the override button:

1. Remove the cover around the lower control panel (figure 4).
2. Select lower control position.
3. Press and hold the override button closer to the operator (figure 9 (A)).
4. Start the combustion engine or electric motor (if not started, the backup pump will be used).
5. Lower the booms with extreme caution.
6. Release the override button and turn off the motor.
7. Attach the cover around the lower control panel.

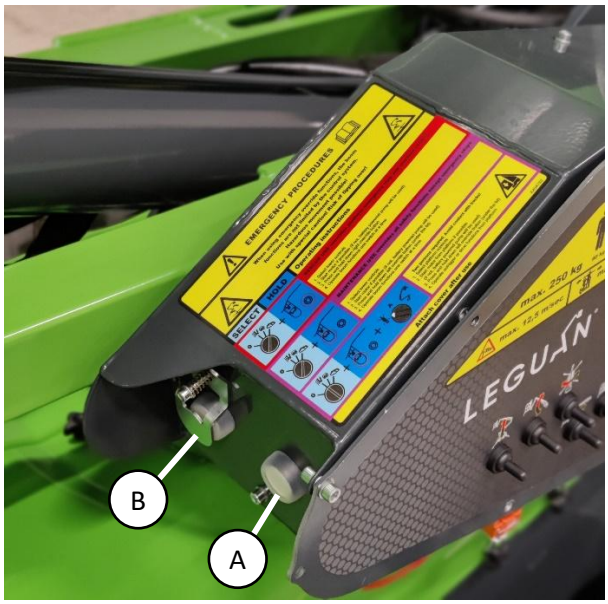

Figure 9. Override buttons

6.4 Safety function override button

Tip-over Hazard!

For possible emergency situations the access platform is equipped with a safety function override button (figure 9 (B)). It enables the operation of drive, outrigger and boom functions in fault situations. The function can for example used in a situation where a sensor has broken, and the machine must be moved to a safe location to be repaired. **Use extreme caution and only in emergency situation!**

Drive and outrigger control override (requires two operators):

- Overrides boom transport position sensors allowing the operation of drive and outrigger functions even if booms are not in transport position. **Tip-over hazard!**

1. Remove the cover around the lower control panel (figure 4).
2. Select platform control position.
3. Press and hold the override button under the lid further from the operator (figure 9 (B)).
4. Start the combustion engine or electric motor from platform control position (if not started, the backup pump will be used).
5. Turn and hold the mode selection switch (between joysticks, figure 3, switch 7) to drive / outrigger position (left-hand side).
6. Use the left hand-side joystick to operate outriggers or the right-hand side joystick to drive the machine with extreme caution. **The operator at the lower controls must avoid contact with the track going up/down during outrigger operation and track movement during driving. Crushing hazard!**
7. Release the override button and turn off the motor.
8. Attach the cover around the lower control panel.

Boom control override:

- Overrides boom outreach control, platform load control, outrigger position control and chassis inclination control sensors allowing boom operation even if outriggers would not be on ground, chassis would be in too high inclination, there would be overload in the platform or outreach would be too much compared to the load in the platform. **Tip-over hazard!**

1. Remove the cover around the lower control panel (figure 4).
2. Select lower control position.
3. Press and hold the override button under the lid further from the operator (figure 9 (B)).
4. Start the combustion engine or electric motor (if not started, the backup pump will be used).
5. Use boom control switches from the lower control panel with extreme caution. **Tip-over hazard!**
6. Release the override button and turn off the motor.
7. Attach the cover around the lower control panel.

When override switches are used, it is possible to move the boom outside the stable operating area which causes tip-over hazard! The manufacturer is not responsible for access platforms falling when safety functions override button has been used!

7. TRANSPORTATION

Before transportation lower the booms down to transport position and lift the outriggers completely up.

NOTICE

Transporting of the access platform is allowed in its transport position only.
No persons or materials are allowed to be transported on the platform.

It is not allowed to tie down the machine so that the ropes go over the booms. Only marked tie-down points can be used!

The access platform is equipped with four lifting points, one at the end of each outrigger (figure 10) from which the machine can be lifted if necessary. Use chains when lifting (min. length 8.2 ft / 2.5 m). Chains must be fastened to all four lifting points. Ensure that the load capacity of the chains and lifting device (crane or other) is adequate!

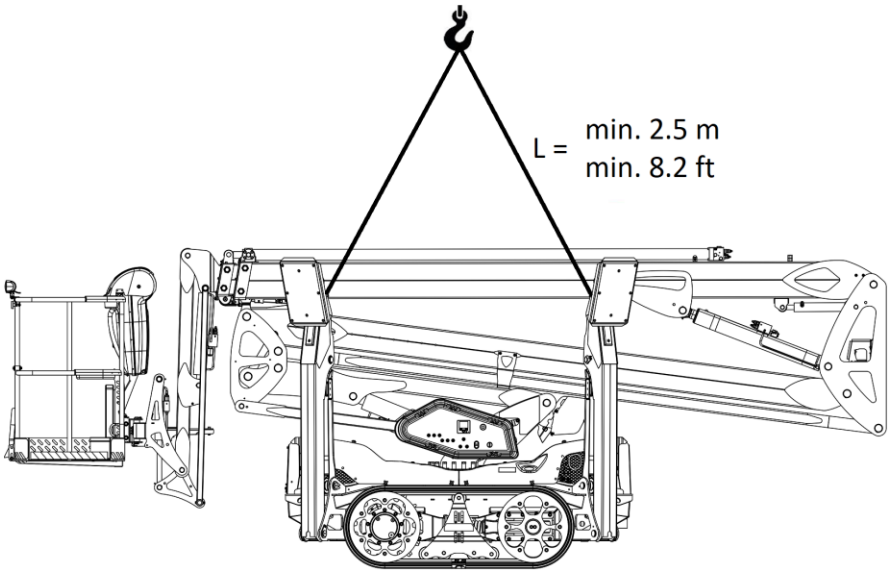

Figure 10. Lifting the access platform

There is an automatic hydraulic brake in the rear axle which engages automatically when the combustion engine / electric motor isn't running. **The access platform must not be parked in steep slopes.**

If the machine is transported on a trailer or on a lorry or similar vehicle, it must be tied down properly. There are four tie-down points marked on the corners of the chassis which make it easy to tie down the machine. Always tie the machine down diagonally from every corner (figure 11).

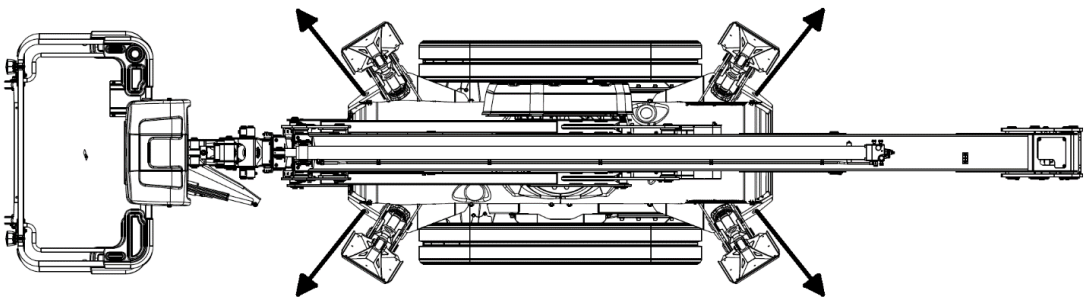

Figure 11. Tie-down points

8. SERVICE, MAINTENANCE AND INSPECTION REGULATIONS

All inspections must be done by following local laws and regulations. The access platform must be the inspected once a year (local laws / regulations may require more frequent inspections). The access platform must also be inspected to an adequate extent if it has been damaged and its strength may have been compromised. Persons performing the inspection shall be qualified for the job. Persons who conduct service and maintenance for the machine shall familiarize themselves with the operation and technical features of the access platform before doing any service operations. All service and maintenance operations must be made in accordance with the instructions in this manual.

8.1 General instructions

- Making structural changes to the machine without written permission from the manufacturer is strictly prohibited.
- All defects that may have an effect on the safe use of this machine must be repaired before commencing operation.
- Inappropriate handling of protected parts causes a risk of serious injury. Only professional maintenance personnel may open the covers.
- Make sure that maintenance is performed in accordance with this Operator's Manual.
- Stop the engine before starting any service or inspection operation. **DISCONNECT ALSO THE 120 VAC PLUG!**
- Do not smoke during service and inspection operations.
- Keep the machine and especially the platform clean.
- Make sure that the operating instructions are complete, readable and in their place in the box at the platform.
- Make sure that all stickers are in their place and readable.
- Make sure that the access platform has been serviced according to the manual.
- Make sure that all inspections have been made according to local regulations.

NOTICE

All spare parts – especially safety related parts and electric components and sensors – must be original Leguan parts.

If the access platform has not been used for a long time, the oil levels must be checked, and the machine's functioning must be inspected before the next use.

9. SERVICE INSTRUCTIONS

9.1 Service and checks, maintenance schedule

CH = Check
CL = Clean
R = Replace

Operation	First service 50 h	Daily	Monthly	100 h / 6 mos.	200 h / 12 mos.	400 h / 24 mos.	1000 h / 60 mos.	120 mos.
Engine oil	R	CH			R			
Engine oil filter	R				R			
Air filter			CL		R			
Coolant	CH	CH				R		
Fuel filters					R			
Fuel water separator				CL				
Fuel tank (9.6)				CH		CL		
Hydraulic oil level (9.7 ja 9.8)	CH		CH				R	
Hydraulic oil return filter (9.7)	R				R			
Hydraulic oil pressure (9.1.1 and 9.9)	CH				CH			
Greasing (9.5)			R					
Drive motor gear oil (9.10)						R		
Crawler track sprocket wheel bolts (9.1.3)	CH				CH			
Crawler track tightness (9.1.4)	CH	CH						
Slew ring bolts (9.4)					CH		R	
Throttle linkage bearing (9.11)						R		
Slew ring brake (9.12)					CH			
Condition of steel structures (9.2)	CH	CH						
Locking of pivot pins (9.2)	CH	CH						
Platform attachment and locking (9.2)	CH	CH						
Electric cables and boxes (9.2)	CH	CH						
Hydraulic fittings, hoses and pipes (9.2)	CH	CH						
Cylinders and valves (9.2)	CH	CH						
Telescope boom chains (9.3)	CH	CH						R
Telescope boom slide pads (9.3)					CH		R	
Battery (9.21)	CH	CH						
Diagnostic and error codes from display (9.13)	CH	CH						
Emergency stop buttons (3.8)	CH	CH						
Emergency lowering (6.1)	CH	CH						
Control switches (4.1, 4.2 and 4.3)	CH	CH						
Outrigger set up (9.14)	CH	CH						
Overload control (9.15)					CH			
Movement speeds of booms (9.17)	CH				CH			
Safety valves (9.18)	CH				CH			
Service reminder (9.19)	CH				CH			
Major inspection (9.1.2)								CH

The above mentioned service intervals are recommendations. If the operating conditions are very hard and/or the machine is in heavy duty use, the service and change intervals must be shortened.

9.1.1 General service info

Leguan model	170	195	225	265
Hydraulic oil	Mobil UNIVIS N 32			
Complete system	14.5 gal / 55 liters			22.5 gal / 85 liters
Oil change volume	9.2 gal / 35 liters			12.4 gal / 47 liters
Fuel tank volume	5 gal / 19 liters (Diesel)			
Engine oil	SAE 10W-30			
Drive motor gear oil	SAE 80W-90 (API) GL5, 0.16 gal (0.6 liters) for each drive motor			
Grease	Lithium NLGI 2 grease (not MoS2)			
Slew ring	Mobilux EP 2			
Telescope boom	Mobil XHP 222			
Hydraulic main pressure	3,045 PSI / 210 bar			3626 PSI / 250bar
Drive motor double speed pressure	363–508 PSI / 25–35 bar			

9.1.2 Major inspection

The access platform should be inspected every 10 years thoroughly by doing a non-destructive testing (NDT) and inspection while the machine is disassembled. This should be done according to the manufacturer's instructions.

9.1.3 Crawler track sprocket wheel bolts

It is important to check the tightening of bolts on the rear sprocket about one week after putting the access platform into operation. When driving with a new machine the parts in the track system adapt to each other and "find their place". Because of this it is possible that the bolts loosen during operation. Loose bolts can cause serious damage to the crawler track chassis.

- Tighten the bolts diagonally opposite to 80 Nm.
- Tightness of the bolts must be checked yearly.

9.1.4 Inspection and adjustment of the track tightness

The tightness of the track is inspected and adjusted with the access platform raised on the outriggers. The tracks must be inspected for the first time and adjusted, if necessary, after one hour of track use. After this initial inspection, the tracks should be checked daily before starting operation and adjusted if necessary. Take steps to keep the tracks in proper tightness. This has direct impact on wear and tear of the track chassis and helps to ensure that the tracks do not come off the sprockets.

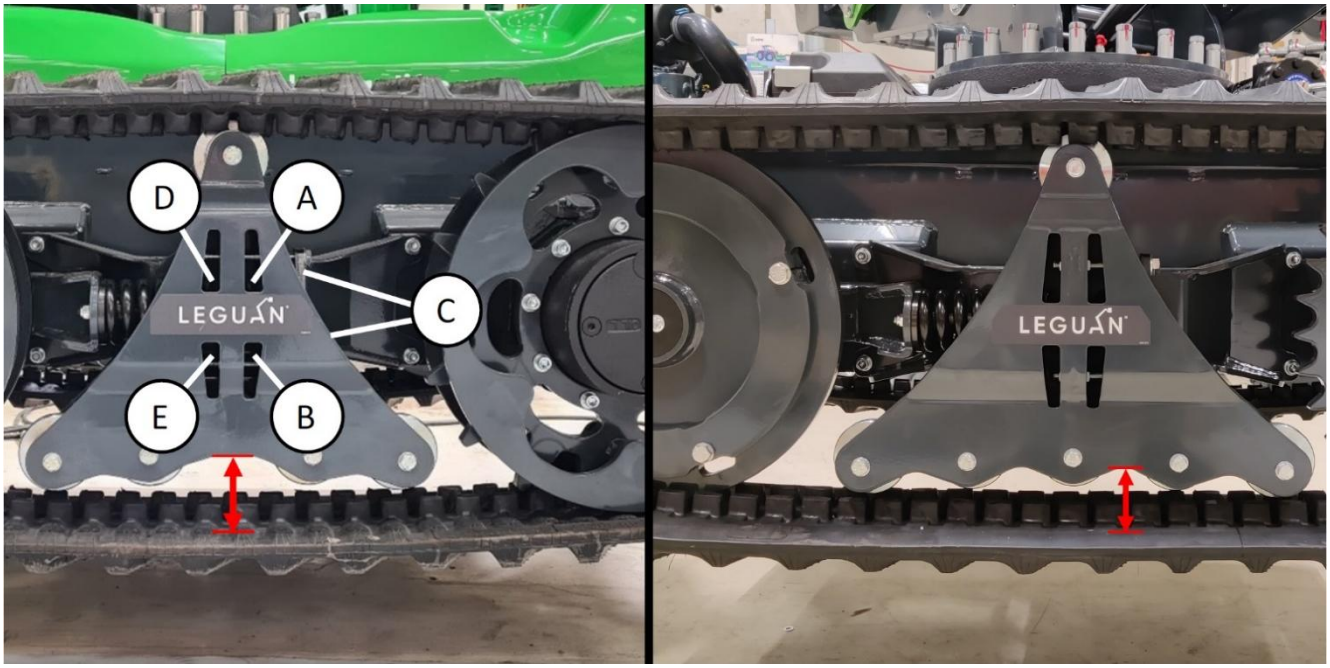

Figure 12. Track tightness adjustment

To inspect the tightness of the tracks:

Raise the access platform off the ground using the outriggers. The tracks should be off the ground minimum 5 cm. Drive backwards a little to have the slack below. The tightness is correct if the gap between the track and the track frame is the same from end to end (marked with red lines in figure 12). The correct gap is 85-90 mm.

To adjust the tightness of the tracks:

The track is tightened with a preloaded spring. To tighten the track, loosen the nuts marked (A) and (B) in figure 12. Then tighten nuts D and E and hold bolts C (or vice versa). This pulls the bolts (figure 12, (C)) and the adjustment plate towards the middle of the track and moves the front track wheel forwards. Tighten the nuts just enough so that the track straightens in relation to the track frame and that the gap is 85-90 mm. Tighten both nuts evenly. After the adjustment tighten the nuts A and B.

9.2 Inspection of mechanical structures, hydraulic and electric systems

The mechanical structure of the machine, locking of pivot pins and platform attachment and locking must be checked visually in daily inspection. Also, the condition hydraulic fittings, hoses, pipes, cylinder and valves must be checked visually. See if there are any oil leaks. The condition of electric cables and boxes must be checked daily also.

Damaged, broken or missing parts must be fixed before putting the machine into operation.

9.3 Telescope boom

The tightness of the chains on the telescope boom must be inspected daily. The indicator plate must be within the marks on the steel cover below it on both sides of the boom.

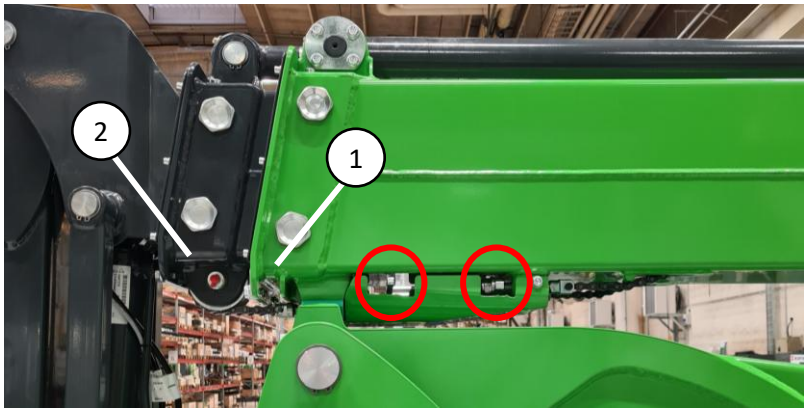

Figure 13. Telescope chain tightness indicators

Figure 14. Close-up picture of the indicator

The condition and backlash of the telescope boom wear pads must be checked yearly, and the wear pads must be replaced at least every 5 years. The thickness of the wear pads at the telescope boom exit on the bottom side must be more than 20 mm (figure 13 (1)) and 19 mm (figure 13 (2)). If they are worn more, all the wear pads including the ones inside the boom at the other end, must be replaced which requires disassembly of the telescope boom.

NOTICE

The pulley chains of the telescope booms, their pulley wheels and fasteners must be replaced during the major 10-year inspection (see 9.1.2).

9.4 Slew ring bolts

Tightening torque of the M16 fastening bolts of the slew ring is 230 Nm. It must be checked yearly, and the bolts must be replaced every 5 years. if a bolt has loosened, it must be replaced with a new bolt. New bolt must be lubricated before tightening.

9.5 Greasing

Greasing of the machine is of utmost importance to prevent wear in joints. The slew ring must be greased in accordance with the maintenance schedule, using grease that contains EP (extreme pressure) additive. Articulation bearings in all hydraulic cylinders and outrigger plate position pins must be greased in accordance with the maintenance schedule.

9.5.1 Greasing diagram

The greasing points for articulating bearings of hydraulic cylinders and outrigger plate position pins are marked on the figure 15.

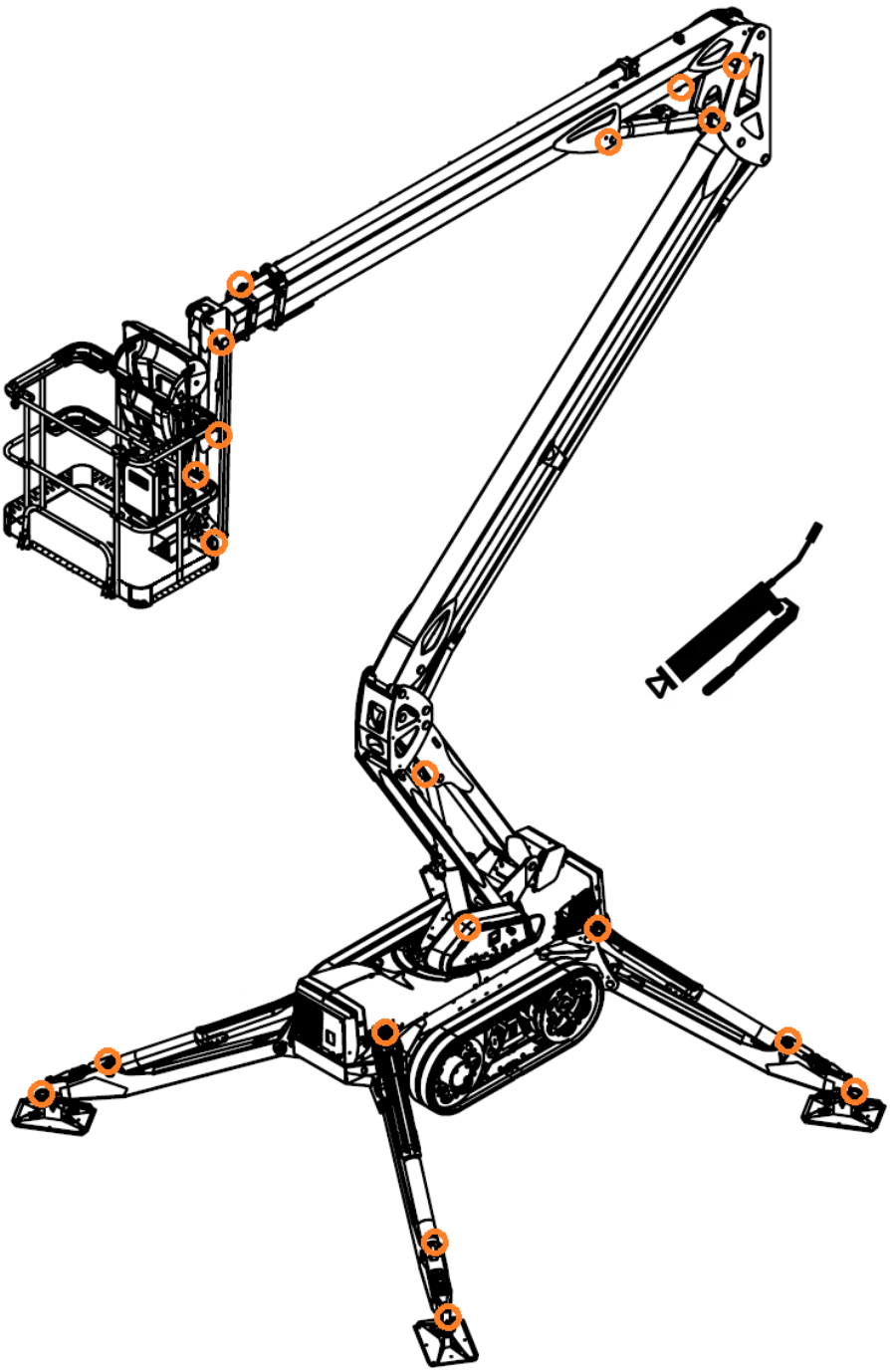

Figure 15. Greasing diagram

9.5.2 Greasing of the slew ring

The slew ring of the access platform must be greased monthly. It is important to notice that the slew ring has four (4) separate greasing points (figure 16) which all must be greased individually. There is a pressure relief screw (figure 17) at the opposite side of the worm gear of the slew ring which must be opened when greasing the slew ring to avoid the seal from coming off. A coupling and a tube can be mounted as an option instead of this screw. In this case it does not need to be opened. There are 3 greasing points next to the battery on the side of the slew ring which are connected to the worm gear and its bearings. One (1) greasing point which is on the top of the slew ring (hole through the pedestal) is connected to the rings ball bearings. When applying grease to this greasing point, it is important to apply grease all around the slew ring. To do this, apply grease and rotate approximately 20° after which apply grease again. Continue until the slew ring is completely greased (360°).

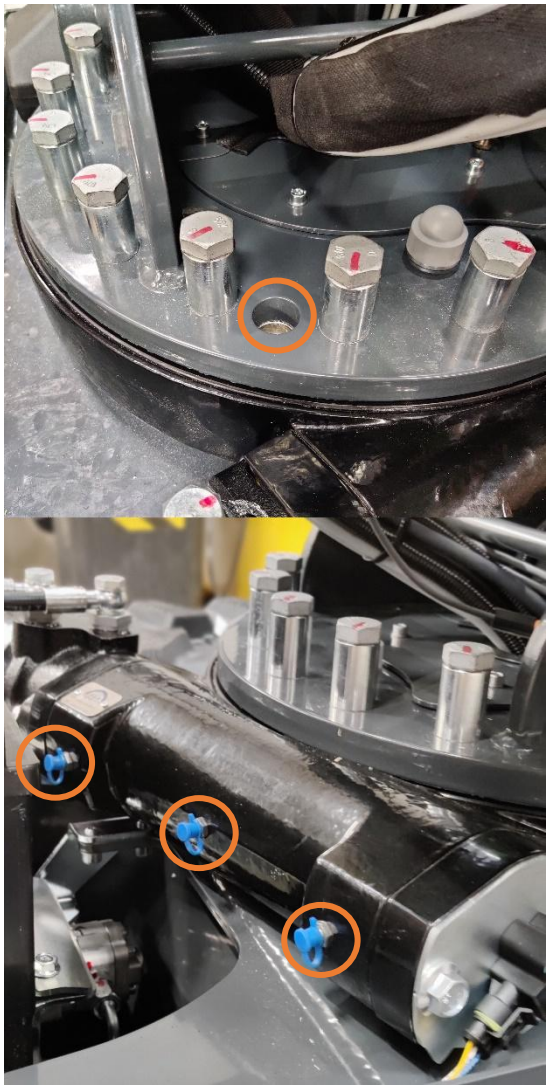

Figure 16. Slew ring greasing points

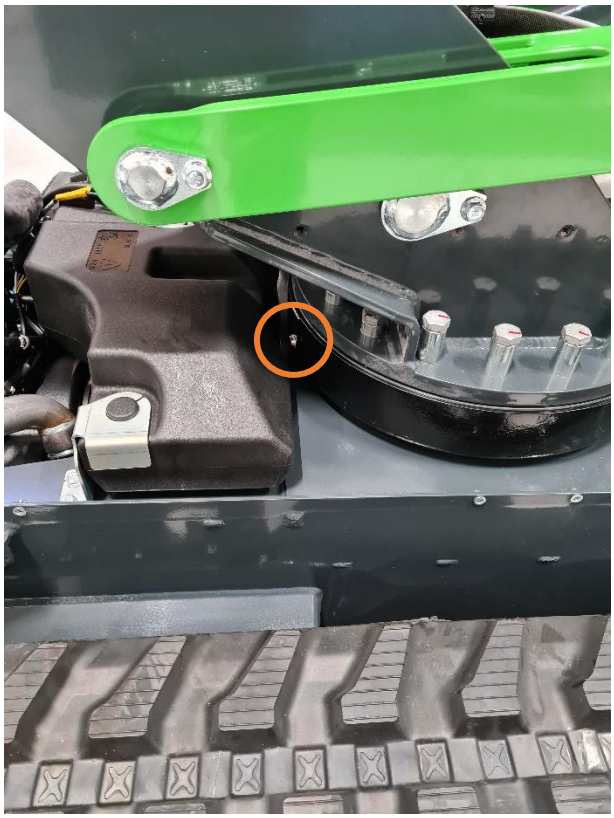

Figure 17. Slew ring greasing pressure relief screw

9.5.3 Greasing the telescope boom chain pulley and inspection of the chain

A pair of leaf chains is used for telescope boom movement. The pulley wheels must be greased monthly.

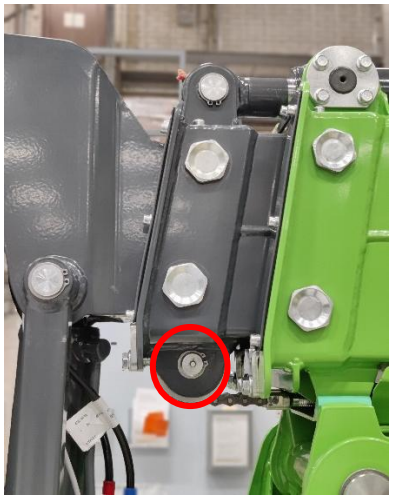

Figure 18. Telescope chain pulley wheel greasing point at the work platform end

Figure 19. Telescope chain pulley wheel greasing points at the lower and upper boom linkage piece end

The telescope chain pulley wheels are greased by using the three greasing points marked on figures 18 and 19. The greasing points are located at the ends of upper boom and first telescope boom. The greasing point at the work platform end is always visible but the greasing points at the upper boom end are located underneath a service hatch.

9.5.4 Greasing of telescope booms

Glide surfaces of the telescope booms (bottom surface, figure 20) should be greased with water resistant grease (e.g. Mobil XHP 222) during monthly greasing. The grease should be applied on the bottom surface of both middle boom and extension on a surface area of approximately 30 mm wide measured from each side edge and for the whole visible length of the booms when the telescope is fully extended. Apply only a thin layer (< 1 mm) of grease on the surface by using a brush for example.

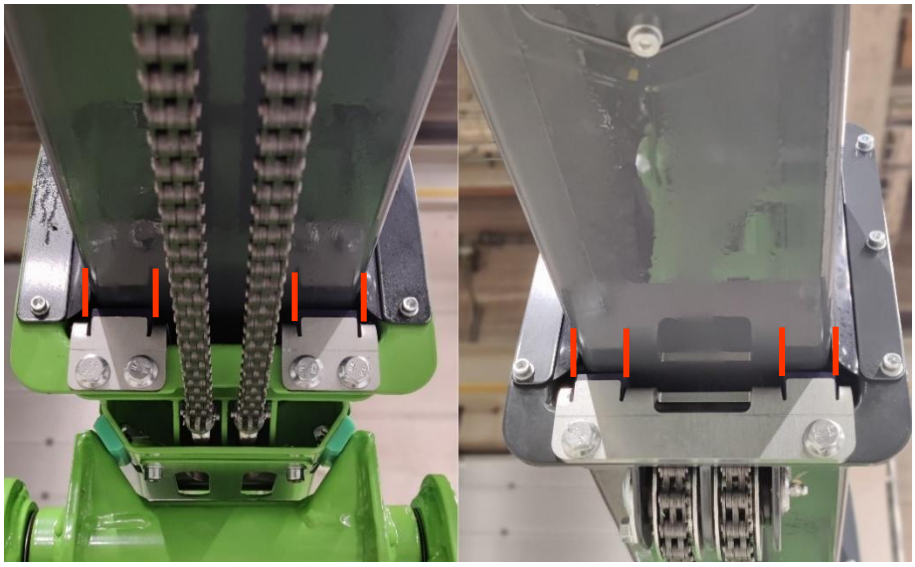

Figure 20. Width of the greased surface on middle boom and extension highlighted with red lines

9.6 Handling of fuel and refueling

Figure 21. Fuel tank cap

Check fuel level and refuel if necessary (fuel tank cap, figure 21 (1)). There is a Kubota diesel engine on the access platform. Use DIESEL fuel only. Use of other fuels is not allowed. See engine manufacturers manual for more information.

Make sure not to let the fuel tank get empty. Should this happen, refuel and restart normally from the start button. If the engine will not start on the first try, take a short break and start again.

The fuel tank must be inspected for impurities and cleaned when necessary.

9.7 Hydraulic oil and hydraulic oil filter replacement

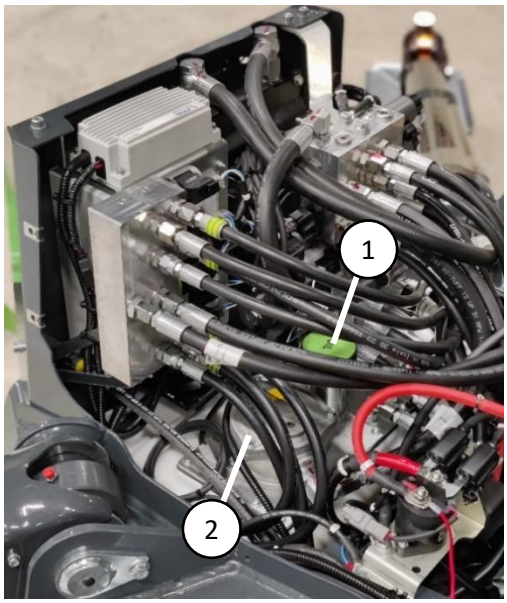

Figure 22. Hydraulic oil tank

Hydraulic oil change can be done either from the suction filter or through the hydraulic oil tank cap (figure 22 (1)) with a suction pump. The suction filter is located in the bottom of the chassis behind the service hatch (figure 23). Hydraulic oil can be drained by detaching the backup pump hose (figure 23 (1)) from the suction filter.

Hydraulic oil return filter (figure 22 (2)) is located on top of the hydraulic oil tank at the rear of the chassis. The filter change is done by opening the lid of the filter case and replacing the filter cartridge with a new one. Make sure there are no leaks before installing the covers back to the machine.

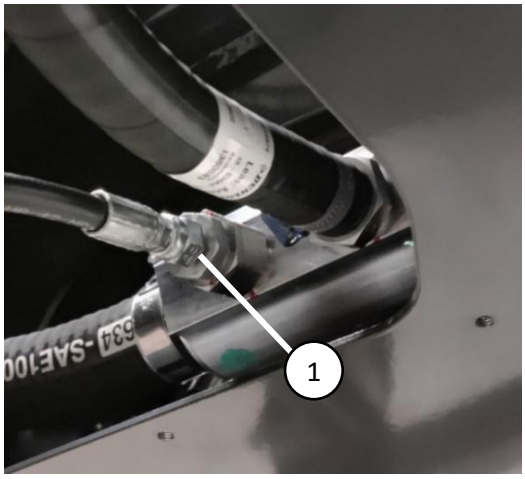

Figure 23. Suction filter

Figure 24. Return oil filter

9.8 Hydraulic oil level

Hydraulic oil level can be checked with the dipstick in the filter cap (figure 22 (1)). Oil level should be at the upper mark in the dipstick when the access platform is in transport position (booms down and outriggers completely up).

9.9 Hydraulic system adjustments

The main hydraulic pressure is adjusted proportionally with an electric pressure relief valve which is controlled by the logic controller of the access platform. The drive motor double speed pressure relief valve is adjusted automatically and doesn't need maintenance. The adjustment of the main pressure relief valve and the drive double speed pressure relief valve can be checked from the display at the lower control panel.

All boom cylinders have two load control valves and the outrigger cylinders have one lock valve and one load control valve which prevent the movement of the hydraulic cylinder for example in the case of a broken hydraulic hose. The load control valves are adjusted at the factory and their adjustment is not allowed to be changed!

9.10 Drive motor gear oil change

Move drive motors so that the text on the side of the drive motor is horizontal. In this position the oil drain plug is in the lowest position (figure 25, 3) and the fill port is on top (figure 25, 1). The middle screw (figure 25, 2) is for checking the oil level. When filling the oil, the middle screw should be open, and the correct oil level is achieved when the oil is filled to reach the middle screw. The oil volume is 0,6 liters.

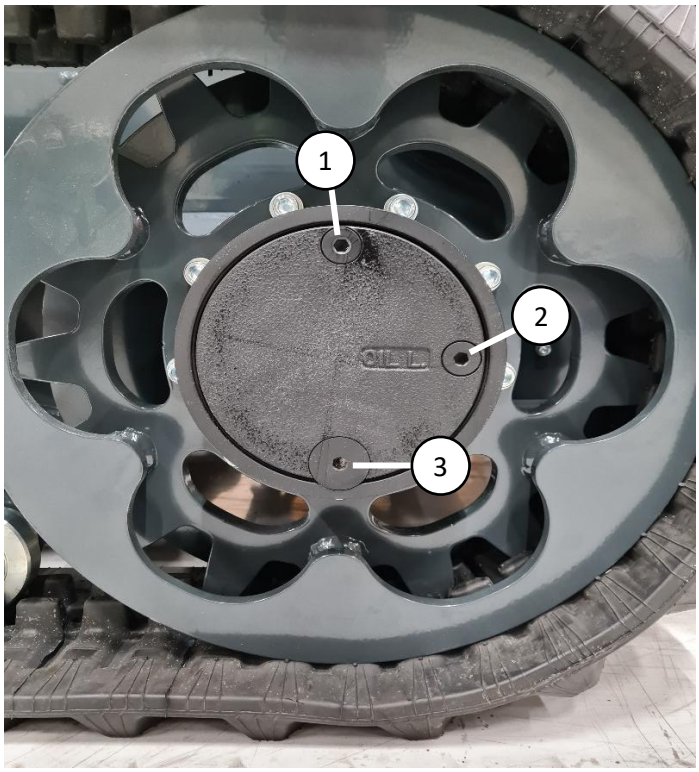

Figure 25. Drive motor gear oil change

9.11 Throttle motor bearing and adjustment

Change the throttle linkage bearing (figure 27 (1)) if it is worn loose. In the process, check the throttle motor play and change the mounting bolts' bearings, if necessary (figure 27 (2)). After this, check the adjustment of the throttle motor.

To adjust the motor set the diesel throttle motor position to 100 % (99 – 100 %) on the display "Service tools". Make sure that the throttle lever (figure 27 (3)) goes into its maximum position. If it needs to be adjusted, loosen the bolts (figure 27 (4)) and push the throttle motor so the lever is in its maximum position. Tighten the bolts.

Figure 26. Throttle position

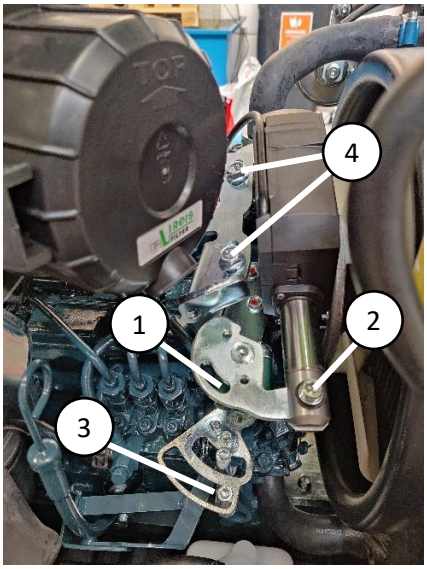

Figure 27. Throttle motor max. position

After this, set the diesel throttle motor position to 0%. Make sure that the engine stop lever goes into end position (figure 28 (1)). If it needs to be adjusted, loosen the bolts (figure 28 (3)) and move the adjustment plate (figure 28 (2)) so that the engine stop lever goes into end position. Tighten the bolts.

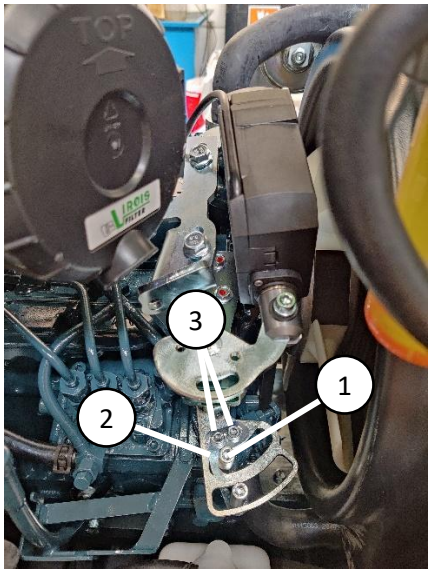

Figure 28. Throttle motor min. position

9.12 Slewing ring brake adjustment and cleaning

The slewing ring's brake adjustment must be checked and adjusted if necessary. Clean the brake during checking, brake must not be greased.

To adjust the cable set the diesel throttle motor position to 40 % (40 – 45 %) on the display "Service tools". This is the position where the brake is just barely released (brake pads not touching the brake disc while slewing). Diesel idle position is ~50 % and therefore brake is always fully released when motor is running.

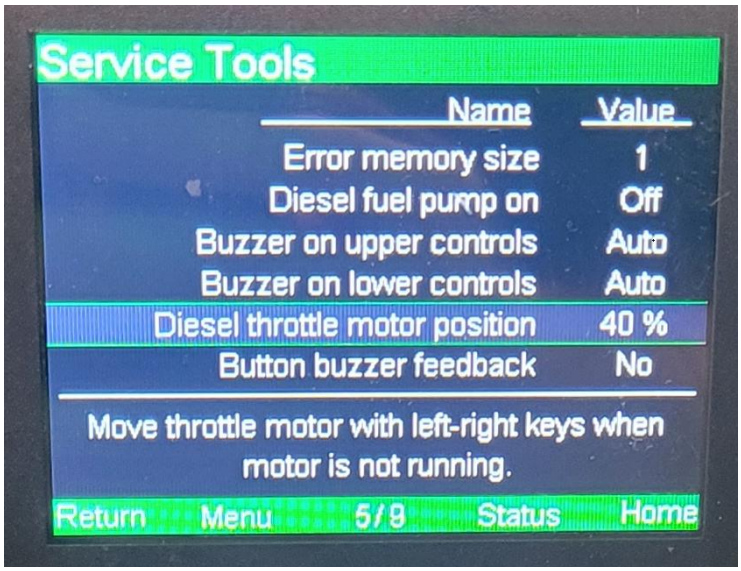

Figure 29. Throttle position

Turn the slewing (use emergency lowering/battery power to turn the boom to keep throttle adjuster in position) to the position where the teeth between brake pads and brake disc are aligned as show in figure 30. Tighten the brake cable until there is now gap between teeth but the slewing can still turn freely. You can try to slew the boom with the battery power while adjusting if necessary. Avoid stressing the brake mechanism with full hydraulic power, it is not designed to withstand that load in long term. In the figure 30 brake is correctly adjusted. When throttle motor is at 40 % brake pads should not move while slewing the boom. When the brake is adjusted correctly it will be released even when diesel motor is on idle and it will be engaged only when the main switch is turned off (or when diesel motor is shutting down).

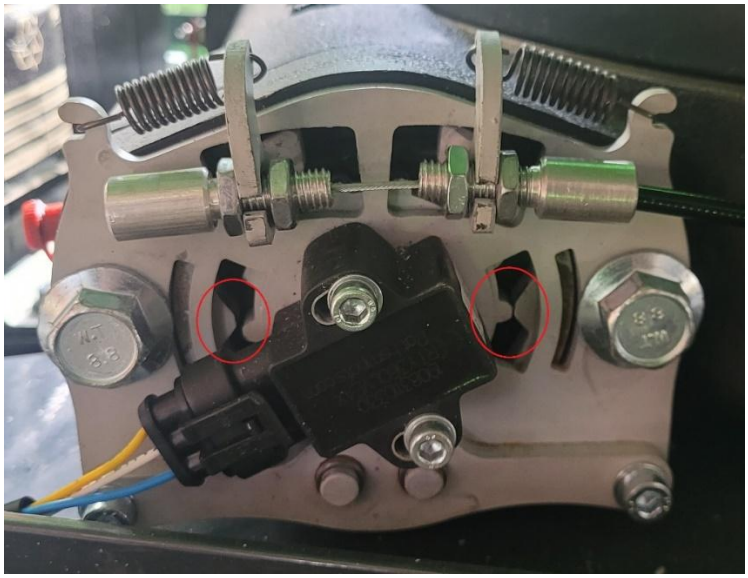
Figure 30. Brake cable adjustment

9.13 Diagnostics and checking the error codes

The machine's control system always performs an automatic diagnostic test when the main switch is turned on and the emergency stop button is released. If there are any errors in the check it is informed with a symbol on the first "Home" page of the display (figure 31). The exact reason for the error can be found by going to "Menu" and selecting "Self Test Diagnostics" on the display (figure 32).

Figure 31. "Home" page diagnostic error symbol

Figure 32. "Self Test Diagnostics" page error

The error memory of the access platform can be checked from the "Menu" selection (figure 33) by selecting "Error Memory" (figure 34). If there are any error codes in the memory, the reason for their cause should be inspected before operating the machine.

Figure 33. "Menu" page

Figure 34. "Error memory" page

9.14 Outrigger set up control

Check the outrigger set up control always before operating the access platform.

The spring-loaded pins holding the outrigger plates should move freely. If the pin is stuck, it must be repaired before continuing the operation.

The functioning of the outrigger inductive switches can be checked from the second “Home” page of the display (figure 35). The different ”Home” pages can be selected by using the up/down arrows on the display. When an outrigger is on ground, it is indicated by a green symbol on that specific outrigger. When an outrigger is off the ground, it is indicated with a red symbol. The chassis inclination can be checked from the same page.

Figure 35. The second ”Home” page

Tip-over hazard!

If the outrigger set up control doesn’t function properly, using the access platform is forbidden until it is repaired.

9.15 Overload control components

Tip-over hazard!

Overload control has been set to correct values at the factory and its strictly forbidden to change its settings.

NEVER OVERLOAD THE ACCESS PLATFORM!

The overload control mechanism is located between the work platform and the platform support (figure 36). The work platform load is measured with a load sensor (figure 36 (1)) which has two channel measurement that is based on strain gauges. Both measurement channels are calibrated according to empty work platform load.

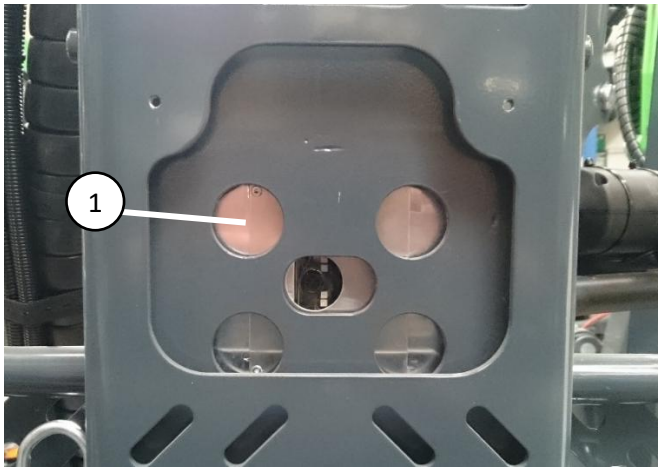

Figure 36. Load sensor

Figure 37. Work platform load on display

Maximum work platform load is adjusted to 551 lbs (250 kg). The work platform load can be checked from the first “Home” page on the display (figure 37). The work platform must be in horizontal position when checking the platform load. If the work platform load value differs significantly (over ± 11 lbs / 5 kg) when the work platform is empty, the sensor should be calibrated. Contact your local authorized Leguan workshop.

The load sensor should be checked regularly for physical damage because damage might cause incorrect sensor values. The load sensor mounting bolts’ tightening torque is 150 Nm.

9.16 Access platform position monitoring

There are four (4) position sensors on the access platform. One of the sensors is inside the lower control panel which measures the inclination of the chassis (figure 38 (1)). Three other sensors are located in the boom structure. One in the lower boom at the upper end of the cylinder (figure 38 (2)), one inside the upper boom under the service hatch (figure 38 (3)) and one in the jib boom at the lower end of the cylinder underneath the protective cover (figure 38 (4)).

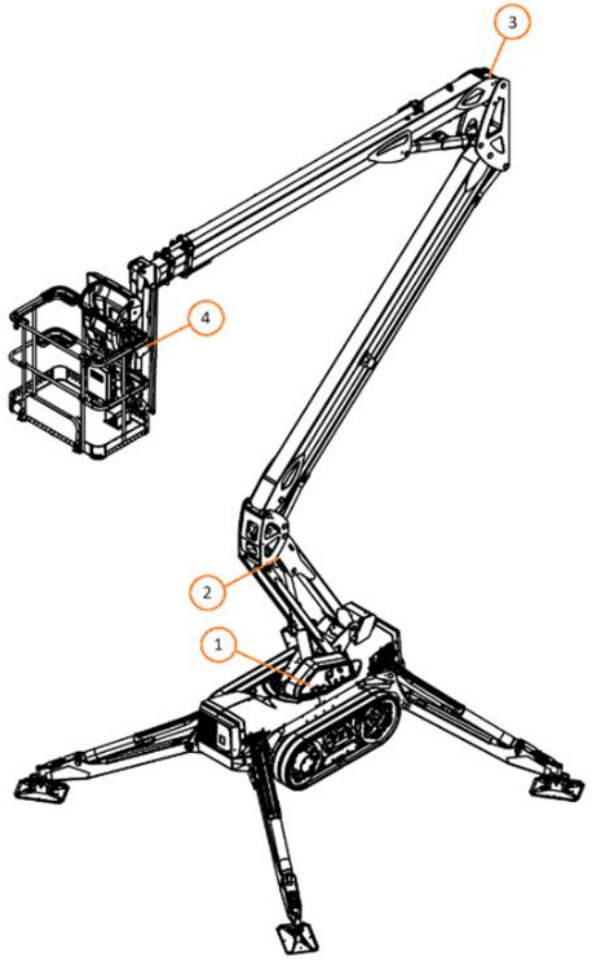

Figure 38. Machine's position sensors

These sensors measure the angle of the booms and the length of the telescope boom. The boom transport position is also measured by these sensors. All position sensors are calibrated at the factory and normally there shouldn't any need to change their calibration.

If a sensor needs to be replaced, it must also be calibrated. Contact your local authorized Leguan service workshop.

9.17 Boom movement speeds

The logic controller of the access platform constantly calculates and limits the movement speed of the booms. The boom movement speed test is done by going through all the boom movements as thoroughly as possible by using the work platform controls. If the movement speed of the booms has exceeded the allowed limit, it is indicated by an error code on the display (see 9.13).

If a boom movement sped exceeds the limits, please contact your local authorized Leguan service workshop.

9.18 Testing of safety valves

The safety valves of the access platform must be checked yearly. The lifetime of the safety valves is 30 years after which they must be replaced. There is an internal diagnostic test on the access platform for testing the valves.

1. Start engine, set outriggers on the ground and level the chassis. Make sure that the booms are in transport position.
2. Isolate the surroundings of the access platform and make sure that there is unrestricted space to move the telescope boom approximately one meter (the telescope boom will move short distance during the test).
3. Select lower controls.
4. Select ”Menu” -> ”Self Test Diagnostics” from the display.
5. Make sure the combustion engine or electric motor is running.
6. Press and hold the ”ok” button on the display until the test is complete. The test will take approximately 30 seconds and the button must be pressed the full duration of the test. If the button is released during the test, it will interrupt the test and the test will start from the beginning when the “ok” button is activated again.
7. After the test is completed, a successful result is indicated on the display with a green ”Pass” text or a failed result will be indicated with a red “Fail” text.
8. If the test was successful, move the booms back to transport position and the operation of the access platform can be continued. **If the test failed, check the failed test point by going through the list on the display and carry out the required repairs. The operation of the access platform is forbidden until it is repaired and test is completed successfully.**

Figure 39. ”Menu” selection on the display

Figure 40. ”Self Test Diagnostics” selection

9.19 Service reminder

There is a service reminder on the display of the lower control panel. When the next service is getting closer, there will be a symbol (figure 41) showing that on the first “Home page” when the main switch is activated. The hour reading next to the symbol tells the operating time until the next service. When the service is getting closer, the color of the symbol will first turn to orange and finally to red.

The required service can be checked by selecting ”Service Schedule” (figure 42) from the “Menu” selection. It has the following services listed:

- ”Diesel motor”: diesel engine oil change, diesel engine oil filter and fuel filters (the first 50 h service only requires diesel engine oil and oil filters)
- ”Hydraulic oil return filter”: hydraulic oil return filter change
- “Track motor oil change”: drive motor gear oil change
- ”Hydraulic oil”: hydraulic oil change

”Service Schedule” only takes into account the operating hours and not the time that has passed since last service, so that must be considered separately. When the service has been done to the machine, select the row on the “Service Schedule” that was done and reset the counter by holding down the “ok” button.

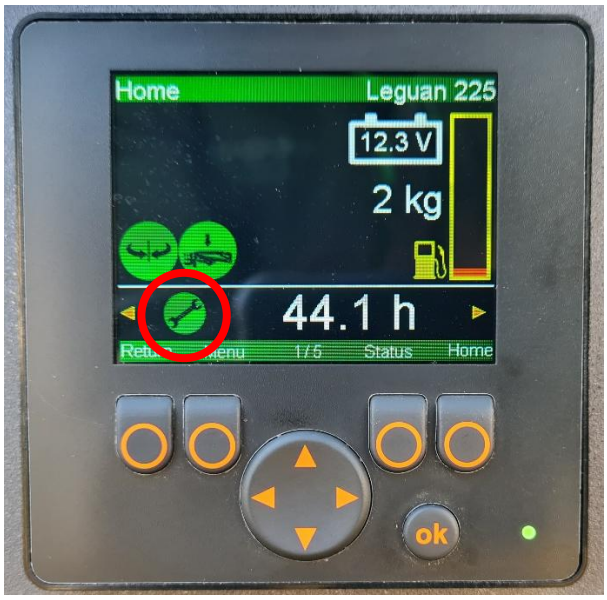

Figure 41. Service reminder symbol

Figure 42. ”Service Schedule” list

9.20 Fuses

The fuses of the machine can be found inside the lower control box (figure 43). Fuse table can be found in electric schema. **Do not exceed the original fuse size!**

1. Fuses for the control devices, voltage when the main switch is activated
2. Fuses for control devices, voltage always even when main switch is turned off
3. Spare fuses

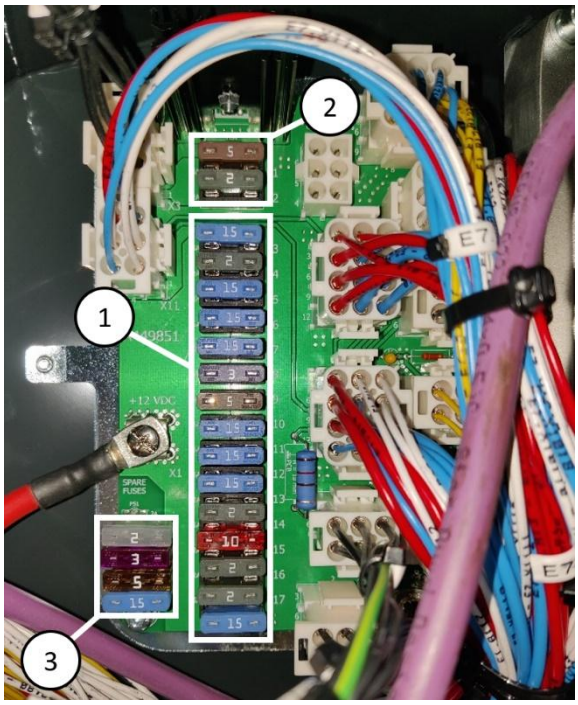

Figure 43. Fuses of the access platform

9.21 Start battery check

The original start battery of the access platform is maintenance-free and it is located in the rear of the chassis. In order to secure the starting and safe operation the battery must be checked regularly. Inspect and clean the battery terminals regularly. Check also condition and fastening of battery cables and terminal insulators. Make sure that the battery cables cannot chafe against any sharp edges. Check also condition and fastening of battery disconnect switch and its cables. Check the battery charge level and charge if necessary. The battery voltage can be seen from the first “Home” page of the display (figure 44).

Figure 44. Battery voltage on the display

9.22 Battery handling

- Battery contains corrosive sulfuric acid – handle the battery with care. When handling the battery wear protective clothing and eyewear.
- Avoid contact with clothes or skin; if electrolyte gets on your skin or clothes flush with a lot of water.
- In case of contact with eyes, flush with a lot of water for at least 15 minutes and call a doctor immediately.
- Do not smoke when handling the battery.
- Do not touch the battery terminals or cables with tools that may case spark emissions.
- In order to avoid spark emissions always disconnect the (-) cable first and connect it last.

9.23 Handling of fuel and oil products

- Do not let any oil leak on the ground.
- Use oil qualities recommended by the manufacturer. Do not mix different oil types and/or brands with each other.
- When handling oil always wear appropriate protective equipment.
- Before refueling always stop the combustion engine / electric motor and disconnect from mains current.
- Only use fuels recommended by the engine manufacturer. Do not mix any additives with the fuel.
- If fuel or oil gets into your eyes, mouth or open wound, clean immediately with a lot of water or designated fluid and call a doctor.

Risk of fluid penetrating skin!

Do not use hands to seek leakages from pressurized system!

Check hydraulic hoses and components only when the engine is stopped and with pressure released from the hydraulic system. Do not operate the machine if you have noticed faults or leaks in hydraulic system. Ejection of hydraulic fluid can cause burns or penetrate the skin and cause serious injuries. Consult a doctor immediately if hydraulic fluid penetrates your skin. Wash carefully with water and soap any body part that has come in contact with hydraulic oil. Hydraulic oil is also harmful to the environment – prevent oil leakages. Only use hydraulic oil type approved by the manufacturer.

Never handle pressurized hydraulic components, because in case of failure on a fitting or component ejection of high-pressure hydraulic fluid can cause tipping over of the machine and serious injuries. Do not operate the machine if you have noticed a fault in the hydraulic system.

Check hydraulic hoses for possible cracks and wear. Follow the wear of the hoses and stop operation if the outer layer of any hose has worn out or has cracks on it. Check routing of the hoses, adjust the hose clamps if necessary in order to prevent chafing. Hydraulic hoses have finite service life and the expiration date is marked on the hoses. After that they have to be changed. If there are signs of oil leakage, put a piece of cardboard under the probable leakage place in order to find the leakage.

If you find a fault, operation of the access platform must be stopped immediately and the hose or the component must be repaired. Contact your local authorized Leguan service workshop.

10. REPAIR INSTRUCTIONS

After major repairs the machine must be examined and tested. Major repair meaning modifications or repairs that affect strength, stability or performance of the machine. Examinations and tests must be conducted for example after following:

- Welding the load carrying parts (only with a permission from the manufacturer (10.3))
- Replacing the load carrying parts (use only Leguan original parts)
- Disassembling and assembling the machine's load carrying parts

Making any alterations to this machine is forbidden and Leguan Lifts does not take any responsibility of unauthorized modifications. Where the manufacturer's approval cannot be obtained, permission to perform modifications may be granted by an equivalent entity after analysis and approval of an engineer.

10.1 Examinations

Repairs must always be done by using original Leguan parts in the first place. If parts are welded, the materials and measurements of the repaired part must be equivalent to the original part. This must always be checked from the manufacturer.

All the signs and decals must be found in their original place (2.4).

10.2 Tests

If alterations are made to the original structure, they must be done according to current regulations, including calculations and tests.

If original Leguan parts are used in repairs, proceed according to these instructions.

Before strength and stability tests, check for fault codes (9.13) and run the test for safety valves (9.18). If there are active faults in the machine, do not proceed before fixing the problem.

Risk of failing structure! Risk of tipping over!

Always carry these tests with extreme caution.

To confirm the structural strength and stability of the machine, perform the following test. Test must be performed with a 25 % overload on the platform: 250 kg * 125 % = 312,5 kg. Level the machine with outriggers on their maximum position. To perform the test, use the load control override button (6.3). Test procedure:

1. Drive the jib boom to a horizontal position
2. Drive the telescope to its maximum allowed outreach
3. Drive the lower boom up to its maximum position
4. Drive the slewing to its maximum on both directions and then return to the middle
5. Drive the upper boom to its maximum position
6. Drive the telescope to its maximum position
7. Drive the upper boom back to horizontal position
8. Drive the machine back to transport position

10.3 Welding

DANGER

Risk of failing structure!

It is not allowed to change the construction and structure of this access platform without a written permission from the manufacturer.

Some of this access platform's parts are made of high tensile steel. Before welding, grade of the steel must be verified from the manufacturer.

Welding repairs are only allowed to be carried out by professional welders. When welding, use only methods and additives suited for above mentioned steel qualities.

SFS EN-ISO 5817 quality level D of imperfections in welding is suitable for all weldings, except for load carrying parts.

Instead of welding load carrying parts they are normally always replaced with a new part and even small repair weldings require a permission from the manufacturer.

Before welding remove and cover the battery plus (+) and minus (-) terminals. Disconnect all connectors of the logic controllers inside the lower control box (figure 45) and upper control box. Connect the earth terminal of the welding device directly to the part to be welded. Do not touch the logic controllers or electric cables with the welding electrode or earth terminal of the welding device. Protect the logic controllers from welding spatters.

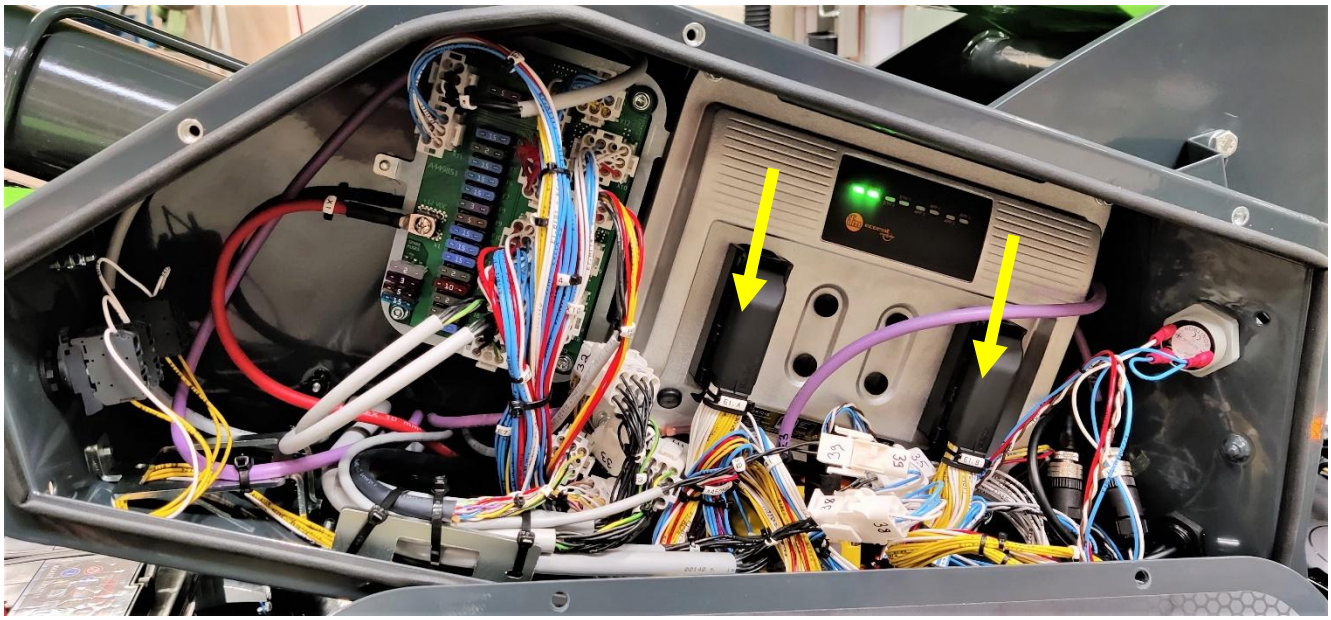

Figure 45. Connectors of the logic controller inside the lower control box

11. INSTRUCTIONS FOR TEMPORARY STORAGE

- The cable of the **+** pole of the battery should be disconnected if the access platform is being stored for a period longer that one month.
- The access platform shall be covered and, if possible, stored inside or under a roof in a place where unauthorized persons don't have access.
- Make sure possible leaks during storage will not cause waste water or similar environmental issues.
- Check the frost resistance of antifreeze.
- Remove dirty motor oil and replace with new. Run the engine for 5 minutes with new oil before long-term storing.
- Run the combustion engine for 5 minutes on idle every 3 months to prevent sliding parts from rusting.
- If the combustion engine is unused for 6 months or longer, apply oil on the valve stem seals and valve guides before starting the engine.
- After long storage period perform necessary checks and maintenance routines according to the service schedule.

12. INSTRUCTIONS FOR CHANGE OF OWNERSHIP

In case of the access platform being sold, the manufacturer should be informed about the new owner. After a change of ownership, please provide following information via email to leguan@avanttecno.com:

- Contact information of the new owner
- Date of transaction
- Machine's serial number
- Machine's operating hours

13. INSTRUCTIONS FOR DISPOSING THE ACCESS PLATFORM

When the access platforms lifecycle comes to an end, it has to be dissembled and disposed of in an environmentally friendly way.

- Battery and other electronic components should be recycled or disposed of according to local regulations.
- Oils and other fluids should be collected and recycled according to local regulations.
- Plastic parts should be recycled according to local regulations.
- Metal parts should be recycled according to local regulations.

14. TROUBLESHOOTING

Following table shows possible failures and malfunctions of the access platform and the ways how to repair them.

ISSUE	REASON	CORRECTIVE ACTION
Motor will not start when the start button is pressed. (combustion engine or electric motor)	Emergency stop button is pressed down. Ignition key switch is in ”0” position or different control position is selected. Fuse is blown.	Release all emergency stop buttons. Select correct control position. Replace fuse (see 9.20). If the issue persists, find out the reason for that.
Combustion engine doesn’t start when the start button is pressed. (See also the engine manufacturer’s manual.)	Engine is too cold. Fuel tank is empty. Empty starter battery. Issue in fuel delivery. Issue in air intake. Start button is broken. Fuel lever is closed.	Restart again, the max glow time is 15 sec (see 5.1.1). Refill the tank (see 9.6). Charge the battery by connecting 120 V plug or use jumper cables. Replace battery if necessary. Check fuel tank, fuel lines, fuel filter and fuel pump. Clean air filter or replace if necessary. Check wiring, replace button. Open the fuel lever.
Electric motor doesn’t start when the start button pressed.	Mains cable is not connected to the power grid. Residual current device (RCD) has tripped. Empty starter battery. Start button is broken.	Connect plug to 120 V / 20 A wall socket (see 4.4). Lift the switch up on the RCD-unit (see 4.4) Charge the battery by connecting 120 V plug or use jumper cables. Replace battery if necessary. Check wiring, replace button.

ISSUE	REASON	CORRECTIVE ACTION
Electric motor stops suddenly during operation.	Power outage.	Lower the booms by using the emergency lowering. Check that there is current in mains.
	Emergency stop button is active.	Release all emergency stop buttons.
	Electric motor thermal overload relay (F41) in connection box has gone off.	Wait for approx. 5 min and start the motor – the relay will return to ON automatically. Find out the reason for overload.
	Fuse is blown.	Replace fuse (see 9.20). If the issue persists, find out the reason for that.
	Connection fault in mains or 12 V wiring.	Check voltages and wirings.
Movements don't work even though the combustion engine / electric motor is running.	Failure in hydraulic system – e.g. hydraulic pump broken.	Check hydraulic pressure. If there is no pressure check function of hydraulic pump safety valve.
	Overload on platform.	Remove overload.
A boom comes down on its own.	Dirt in the load control valve or a defective valve.	Clean valve with compressed air, and if that does not help, change the valve.
	Dirt in the emergency lowering valve or a defective valve.	Clean valve with compressed air, and if that does not help, change the valve.
	Cylinder seals are faulty.	Change the cylinder seals.
Outrigger gives in.	Make sure that the ground doesn't give in.	Put extra support plates under the outriggers or move the machine to another place.
	Air in outrigger cylinder(s).	Move outriggers all the way up and down a couple of times.
	Dirt in load check valve or defective valve.	Clean valve with compressed air, if that doesn't help change valve.
	Faulty outrigger cylinder seals.	Change cylinder seals.

ISSUE	REASON	CORRECTIVE ACTION
Platform tilts backward by itself when booms are down on transport supports.	Air in hydraulic system. Dirt in load control valve of defective valve. Cylinder seals faulty.	Start the combustion engine / electric motor, drive the platform to extreme end positions. If this doesn't help, do the air bleeding of the platform self levelling system (there are bleeding screws in the self levelling cylinders). Clean valve with compressed air, if that doesn't help change valve. Change cylinder seals.
Automatic leveling does not work, the access platform will level the chassis but booms are not operational. The green light does not blink.	One of the four outriggers is not firmly against ground or the outrigger limit switch is defective.	Ensure all outriggers are properly deployed, check outrigger sensors (see 9.14).
Automatic leveling does not work, the access platform will level the chassis but booms are not operational. The green light is blinking.	The chassis is not levelled, issue with the levelling sensor on the chassis.	Re-level the access platform, check level sensor.
All outriggers firmly against ground. The green light does not blink and the fault light blinks.	Issue with the automatic leveling.	Drive outriggers off the ground, re-level, check outrigger sensors if necessary (see 9.14).
Booms in transport position, the green transport support light is not on and the fault light is not on. Outriggers will not operate.	Booms are not properly in transport position.	Lift up the boom slightly and use Home function to bring the booms down in transport position. Hold the Home function until the green transport position and boom center position lights are constantly active (see 5.5.1).
Booms lifted from the transport support, upper boom will not move down.	Telescope outreach sensor wire broken, boom angle sensor broken, load cell unit broken, too much inclination on the chassis.	Lower the boom using emergency lowering procedures (see 6). Use extreme caution. Tip-over hazard! Replace the broken sensor and calibrate the new sensor.

ISSUE	REASON	CORRECTIVE ACTION
Booms in transport position, the green transport support light is not on and the fault light is on. Outriggers will not operate.	Telescope boom not completely or booms not properly in transport position.	Make sure all booms are in transport position including the telescope boom all the way in. Check that all boom position sensors are properly fastened (see 9.16). Check the error code from display (see 9.13).
Overload indicator light blinking.	Load sensor reading negative (-50 kg / -110 lbs or more).	Make sure the platform sits freely and does not lean on anything. Contact Leguan service.
Drive functions work intermittently.	Booms not properly on their transport supports.	Make sure booms are properly in transport position and cylinders in their end position.

15. PERFORMED SERVICE

It is advisable to write down all service operations that are included in the periodical service. All services that have been made during the warranty period must be noted on the list below, otherwise the manufacturer's warranty will void. The service operations mentioned in the maintenance schedule on chapter 9.1 shall be noted as follows: **First Service (50 hours), 100 hour service, 200 hour / 1 Year service etc.**

#	Date (dd.mm.yyyy)	Operating hours	Type of service (e.g. first service)	Notifications, additional repairs, etc.
1				
2				
3				
4				
5				
6				
7				
8				
9				
10				
11				
12				