LEGUÁN®

225

Varaosakirja
Parts Manual
Dellista
Ersatzteilliste

Serial numbers: 80100->

PART OF AVANT GROUP

2/2023

www.leguanlifts.com

© This drawing is the property of Avant Tecno Oy.

Table Of Contents

A444819	LEGUAN 220	4
A444821	CHASSIS ASSEMBLY LEGUAN 220	6
A450698	HYDRAULIC OIL TANK ASSEMBLY LEGUAN 220	8
A450026	HYDRAULIC OIL TANK LEGUAN 220	10
A450025	COARSE FILTER ASSEMBLY, OIL TANK	12
A449395	OUTRIGGER ASSEMBLY LEGUAN 220	14
A448927	OUTRIGGER CYLINDER ASSEMBLY LEGUAN 220	16
A445848	TRANSMISSION ASSEMBLY LEGUAN 220	18
A454184	DRIVE MOTOR ASSEMBLY	20
A454825	WHEEL, DRIVE MOTOR	22
A448814	TRACK TIGHTENER ASSEMBLY LEGUAN 220	24
A454183	IDLER WHEEL ASSEMBLY	26
A454072	SPRING ASSEMBLY, TIGHTENER	28
A454822	IDLER WHEEL	30
A449453	ELECTRIC MOTOR 230V ASSEMBLY LEGUAN 220	32
A450073	A449453 ELECTRIC MOTOR 120V ASSEMBLY	34
A450074	EXTRA WEIGHT ASSEMBLY, ELECTRIC MOTOR	36
A448251	REAR GRILLE ASSEMBLY LEGUAN 220	38
A445987	HYDRAULIC OIL COOLER ASSEMBLY LEGUAN 220	40
A450978	CONNECTION BOX 230V ASSEMBLY	42
A450274	CONNECTION BOX 230V EQUIPPED LEGUAN 220	44
A458415	CONNECTION BOX 120V ASSEMBLY	46
A450075	CONTROL VALVE OUTRIGGERS LEGUAN 220	48
A450573	HYDRAULIC MANIFOLD ASSEMBLY, PUMP	50
A453079	SPLITTER BOX ASSEMBLY	52
A445935	ENGINE ASSEMBLY LEGUAN 220	54
A450937	FUEL TANK ASSEMBLY LEGUAN 220	56
A447373	FUEL TANK ASSEMBLY LEGUAN 220	58
A449403	DIESEL ENGINE D902 ASSEMBLY LEGUAN 220	60
A449442	THROTTLE ACTUATOR ASSEMBLY	62
A453017	HYDRAULIC PUMP ASSEMBLY LEGUAN 220	64
A449205	EXHAUST MUFFLER ASSEMBLY LEGUAN 220	66
A447164	RADIATOR ASSEMBLY LEGUAN 220	68
A450202	STARTER BATTERY 12V ASSEMBLY LEGUAN 220	70
A446475	BATTERY DISCONNECT SWITCH ASSEMBLY	72
A446034	SLEWING RING ASSEMBLY LEGUAN 220	74
A445988	COVER PANELS CHASSIS LEGUAN 220	76
A444101	BOOMS ASSEMBLY LEGUAN 220	78
A444564	LOWER BOOMS ASSEMBLY LEGUAN 220	80

© This drawing is the property of Avant Tecno Oy.

© This drawing is the property of Avant Tecno Oy.

A446071	PEDESTAL ASSEMBLY LEGUAN 220	82
A455168	CONTROL BOX ASSEMBLY, CHASSIS	84
A445921	CONNECTION BOX ON PIEDESTAL LEGUAN 220	86
A457387	GPS TRACKER ASSEMBLY	88
A455166	CONTROL PANEL ASSEMBLY, CHASSIS	90
A457922	DISPLAY ASSEMBLY, LOWER CONTROLS	92
A446028	HOUSING WITH EQUIPMENT REMOTE CONTROL	94
A446450	HYDRAULIC MANIFOLD, LOWER BOOM	96
A446083	LOWER BOOM 1 ASSEMBLY LEGUAN 220	98
A446431	LIFT CYLINDER ASSEMBLY LEGUAN 220	100
A446058	LOWER BOOM 2 ASSEMBLY LEGUAN 220	102
A445482	HYDR. MANIFOLD ASSEMBLY, BOOM	104
A444563	UPPER BOOM ASSEMBLY LEGUAN 220	106
A444561	UPPER BOOM WITH CHAIN LEGUAN 220	108
A445164	ALUMINIUM CHANNEL CABLE CARRIER CHAIN	110
A444556	MIDDLE BOOM ASSEMBLY LEGUAN 220	112
A445153	ALUMINIUM CHANNEL OUTER ASSEMBLY LEGUAN	114
A444541	TELESCOPIC BOOM ASSEMBLY LEGUAN 220	116
A445220	TELESCOPIC CYLINDER ASSEMBLY LEGUAN 220	118
A445143	HYDR. CYLINDER UPPER BOOM WITH VALVES	120
A444533	JIB BOOM ASSEMBLY LEGUAN 220	122
A447276	HYDR. CYLINDER ASSEMBLY, JIB	124
A419594	HYDR. CYLINDER WITH CHECK VALVES SELF LE	126
A444544	PLATFORM+SELF LEVELLING PIECE ASSEMBLY	128
A447344	ROTATION PLATFORM ASSEMBLY LEGUAN 220	130
A447345	MOUNTING BRACKET PLATFORM ASSEMBLY	132
A449211	CONTROL PANEL PLATFORM ASSEMBLY	134
A444822	CONTROLS ON PLATFORM LEGUAN 220	136
A444823	DASHBOARD PLATFORM ASSEMBLY LEGUAN 220	138
A453723	WORK PLATFORM ACCESSORIES	140
A453724	WORK PLATFORM ASSEMBLY LEGUAN 220	142
A443939	WORK PLATFORM 900X820 MM ASSEMBLY LEGUAN	144
A443940	CROSS BAR, OPENING PLATFORM 900X820MM	146
A417499	CROSS BAR, OPENING PLATFORM L135	148
A421621	WORK LIGHT, ON PLATFORM, LEGUAN 190	150
A456117	DECAL KIT	152
A456118	DECAL KIT USA	154
A457955	HYDRAULIC HOSE KIT	156
A457975	CABLE HARNESSES COMPLETE	158
A451231	CABLE HARNESSES	160

© This drawing is the property of Avant Tecno Oy.

© This drawing is the property of Avant Tecno Oy.

A444819 LEGUAN 220

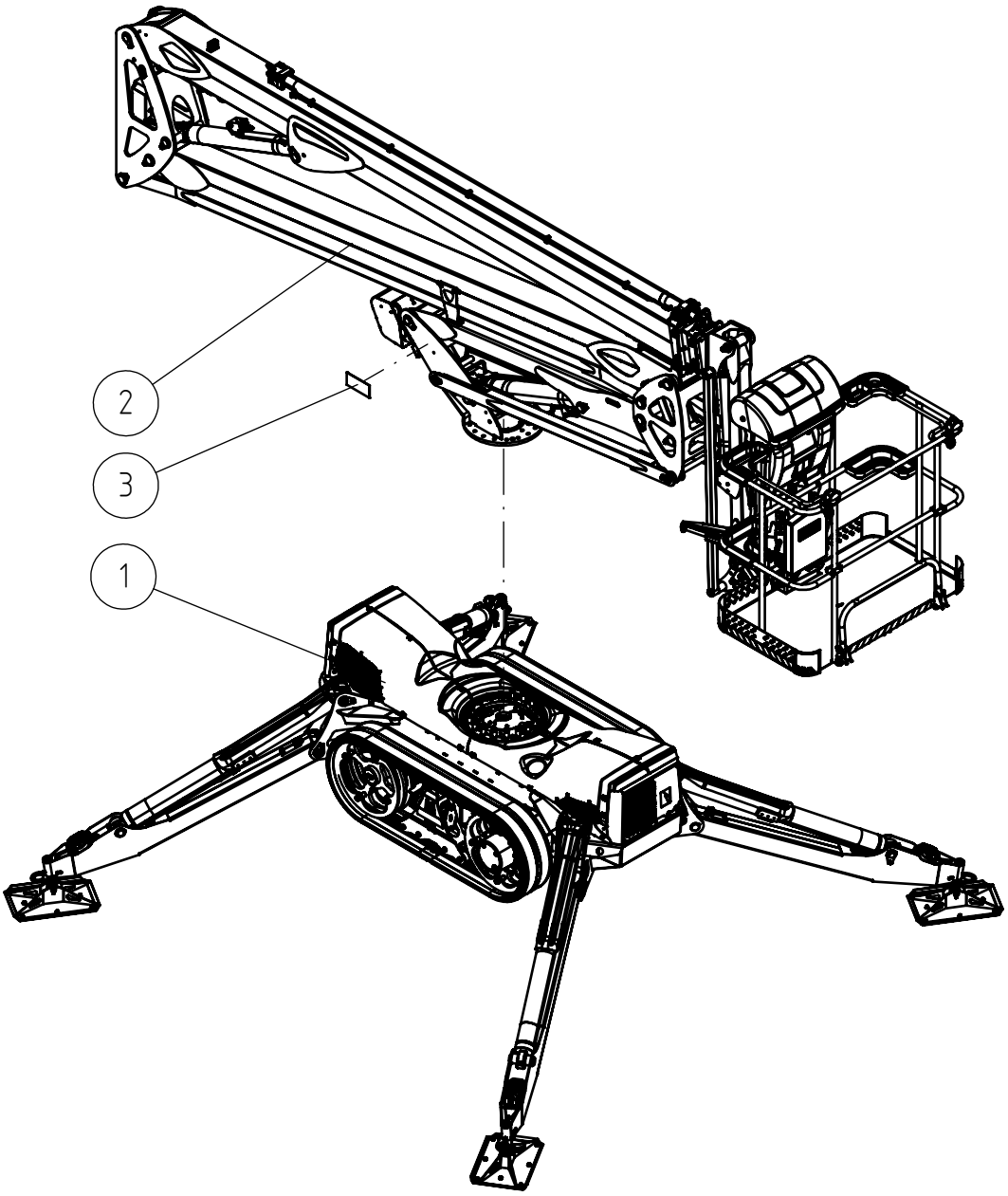

© This drawing is the property of Avant Tecno Oy.

© This drawing is the property of Avant Tecno Oy.

A444819 LEGUAN 220

REF	PART NO	QTY	DESCRIPTION	NOTES	PAGE
1	A444821	1	CHASSIS ASSEMBLY LEGUAN 220		6
2	A444101	1	BOOMS ASSEMBLY LEGUAN 220		78
3	A454774	1	TYPE PLATE CE LEGUAN 220		-
3	A456693	1	TYPE PLATE AUS LEGUAN 220		-
3	A456105	1	TYPE PLATE USA LEGUAN 220		-
4	A456117	1	DECAL KIT		152
4	A456118	1	DECAL KIT USA		154
5	A457955	1	HYDRAULIC HOSE KIT		156
6	A457975	1	CABLE HARNESSES COMPLETE		158

© This drawing is the property of Avant Tecno Oy.

© This drawing is the property of Avant Tecno Oy.

A444821 CHASSIS ASSEMBLY LEGUAN 220

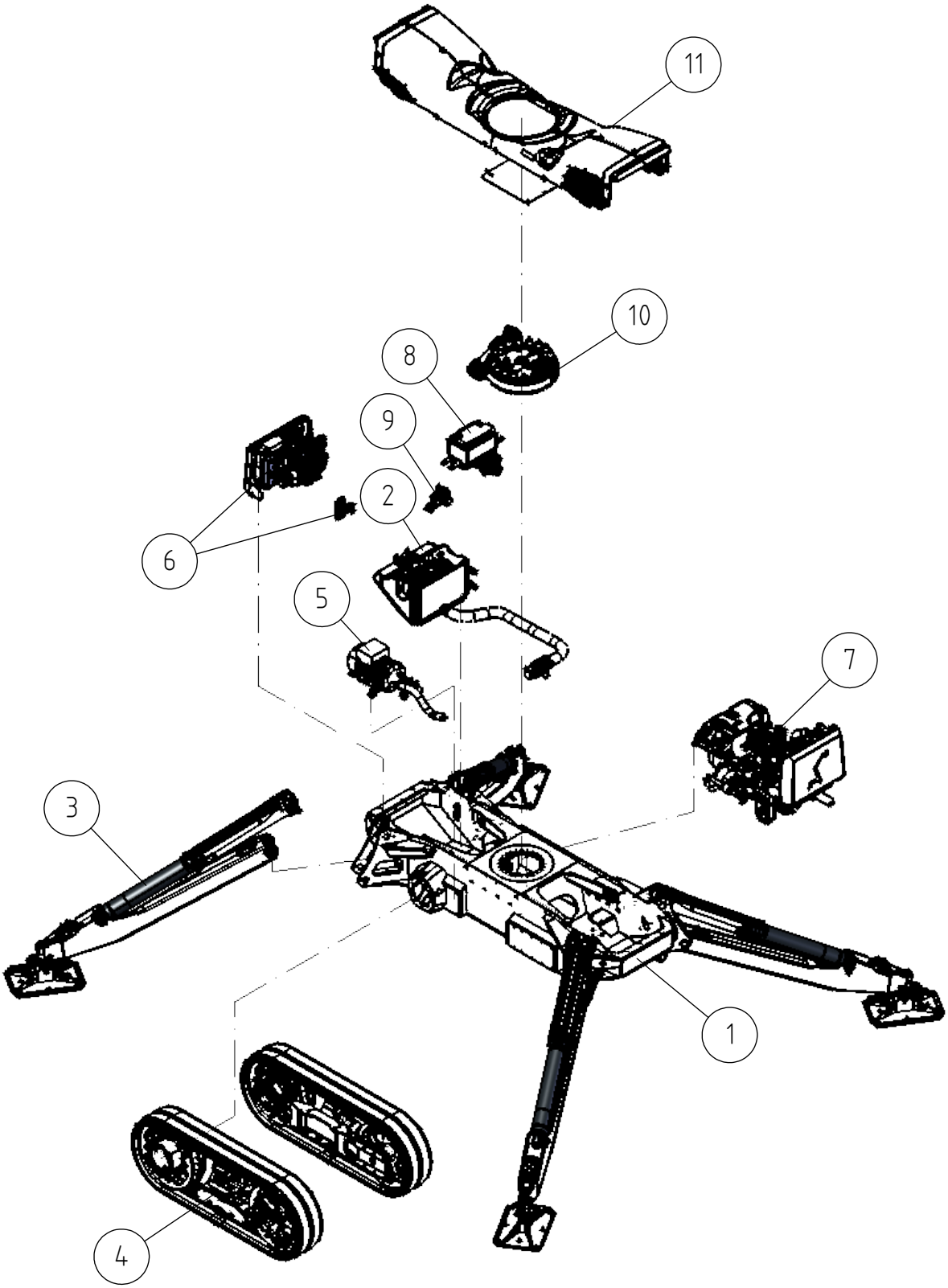

© This drawing is the property of Avant Tecno Oy.

© This drawing is the property of Avant Tecno Oy.

A444821 CHASSIS ASSEMBLY LEGUAN 220

REF	PART NO	QTY	DESCRIPTION	NOTES	PAGE
1	A445864	1	CHASSIS LEGUAN 220		-
2	A450698	1	HYDRAULIC OIL TANK ASSEMBLY LEGUAN 220		8
3	A449395	4	OUTRIGGER ASSEMBLY LEGUAN 220		14
4	A445848	1	TRANSMISSION ASSEMBLY LEGUAN 220		18
5	A449453	1	ELECTRIC MOTOR 230V ASSEMBLY LEGUAN 220		32
5	A450073	1	A449453 ELECTRIC MOTOR 120V ASSEMBLY		34
5	A450074	1	EXTRA WEIGHT ASSEMBLY, ELECTRIC MOTOR		36
6	A448251	1	REAR GRILLE ASSEMBLY LEGUAN 220		38
7	A445935	1	ENGINE ASSEMBLY LEGUAN 220		54
8	A450202	1	STARTER BATTERY 12V ASSEMBLY LEGUAN 220		70
9	A446475	1	BATTERY DISCONNECT SWITCH ASSEMBLY		72
10	A446034	1	SLEWING RING ASSEMBLY LEGUAN 220		74
11	A445988	1	COVER PANELS CHASSIS LEGUAN 220		76

© This drawing is the property of Avant Tecno Oy.

© This drawing is the property of Avant Tecno Oy.

A450698 HYDRAULIC OIL TANK ASSEMBLY LEGUAN 220

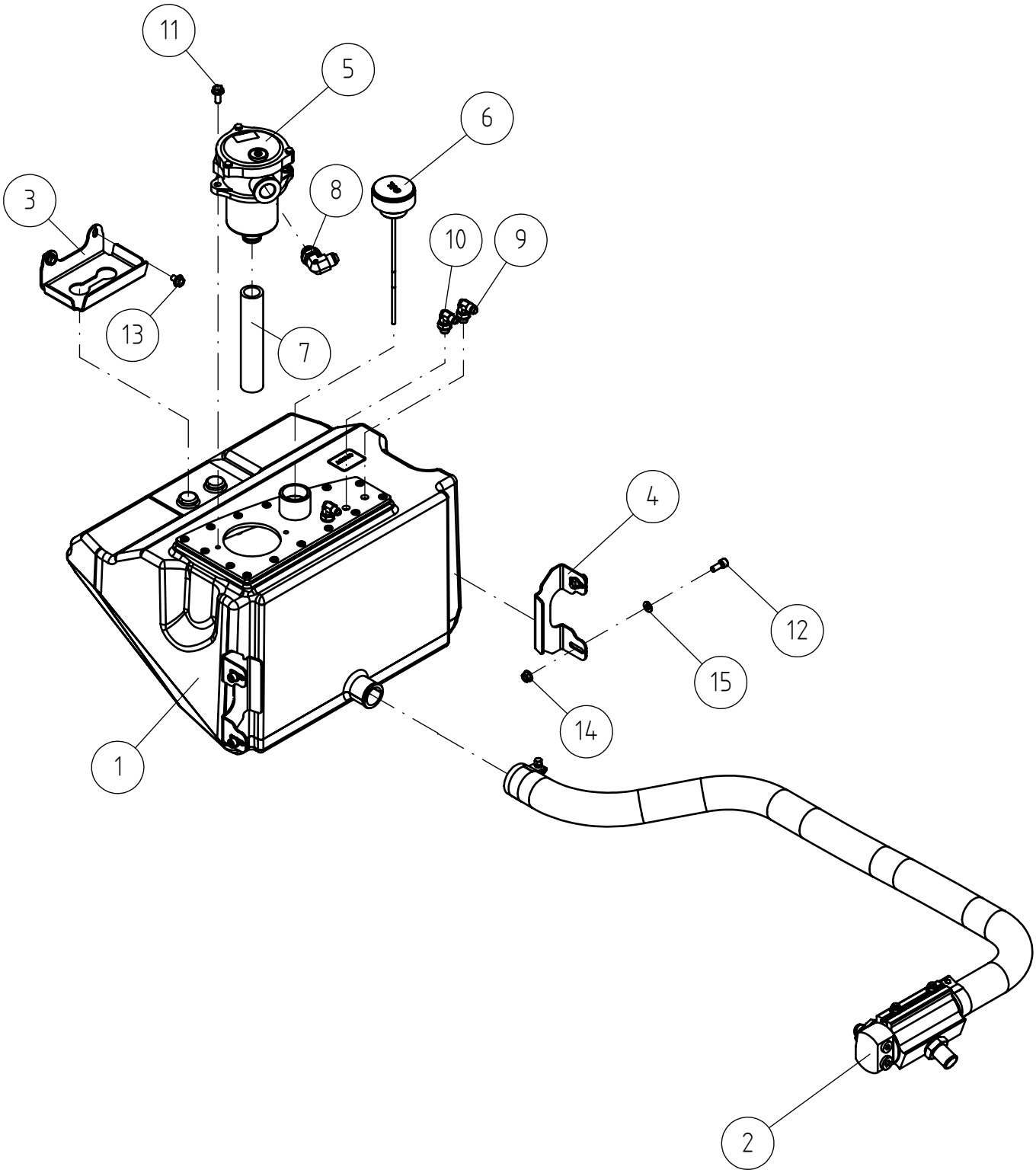

© This drawing is the property of Avant Tecno Oy.

© This drawing is the property of Avant Tecno Oy.

A450698 HYDRAULIC OIL TANK ASSEMBLY LEGUAN 220

REF	PART NO	QTY	DESCRIPTION	NOTES	PAGE
1	A450026	1	HYDRAULIC OIL TANK LEGUAN 220		10
2	A450025	1	COARSE FILTER ASSEMBLY, OIL TANK		12
3	A450273	1	MOUNTING BRACKET, HYDR. OIL TANK		-
4	A450185	2	MOUNTING BRACKET, HYDR. OIL TANK		-
5	73750	1	HYDR. OIL FILTER OMTF65-20 COMPLETE		-
6	A48010	1	DIPSTICK L=230 HYDR. OIL R1 1/4"		-
7	A453012	1	DRAIN HOSE L=180		-
8	64045	1	ELBOW FITTING 90° C40XS12-1/2 /2		-
9	64087	1	ELBOW FITTING 90 DEGR. /4#		-
10	64687	2	ELBOW FITTING 90º C40XS6-1/4"		-
11	A429201	2	HEXAGONAL SERRATED SCREW M8*20 WITH FLAN		-
12	74481	4	HEXAGONAL HEAD SCREW M8*20 DIN 912 ZN		-
13	A429197	2	HEXAGONAL SERRATED SCREW M8*12 W. FLANGE		-
14	A450046	4	HEXAGONAL NUT M8 WITH FLANGE		-
15	73122	4	WASHER M8 A8,4 DIN 125 ZN		-

© This drawing is the property of Avant Tecno Oy.

© This drawing is the property of Avant Tecno Oy.

A450026 HYDRAULIC OIL TANK LEGUAN 220

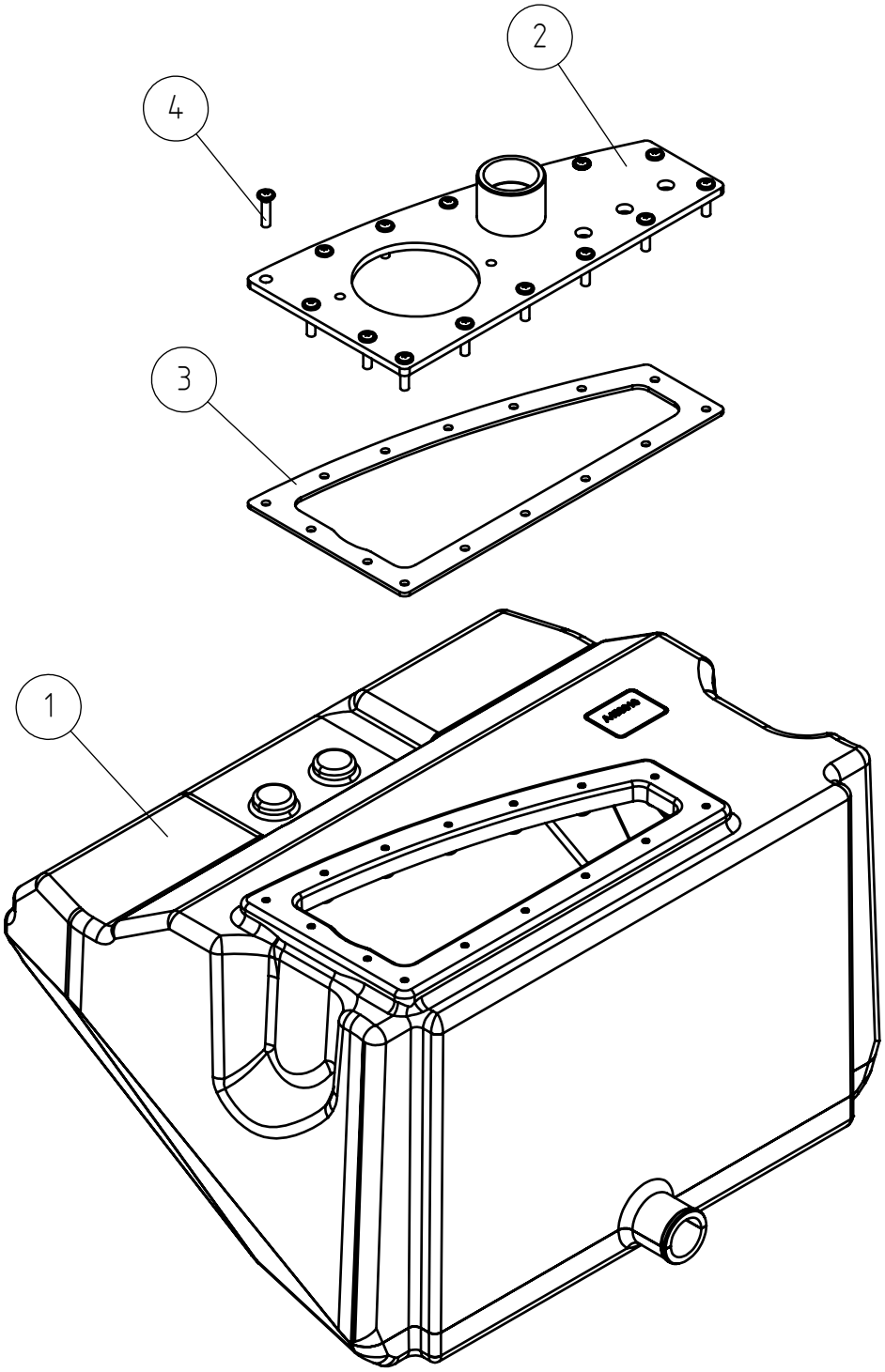

© This drawing is the property of Avant Tecno Oy.

© This drawing is the property of Avant Tecno Oy.

A450026 HYDRAULIC OIL TANK LEGUAN 220

REF	PART NO	QTY	DESCRIPTION	NOTES	PAGE
1	A450010	1	HYDRAULIC OIL TANK		-
2	A450131	1	LID, HYDR. OIL TANK		-
3	A421520	1	SEAL HYDRAULIC OIL TANK 200 SER2		-
4	A430829	16	TORX SCREW M6*25		-

© This drawing is the property of Avant Tecno Oy.

© This drawing is the property of Avant Tecno Oy.

A450025 COARSE FILTER ASSEMBLY, OIL TANK

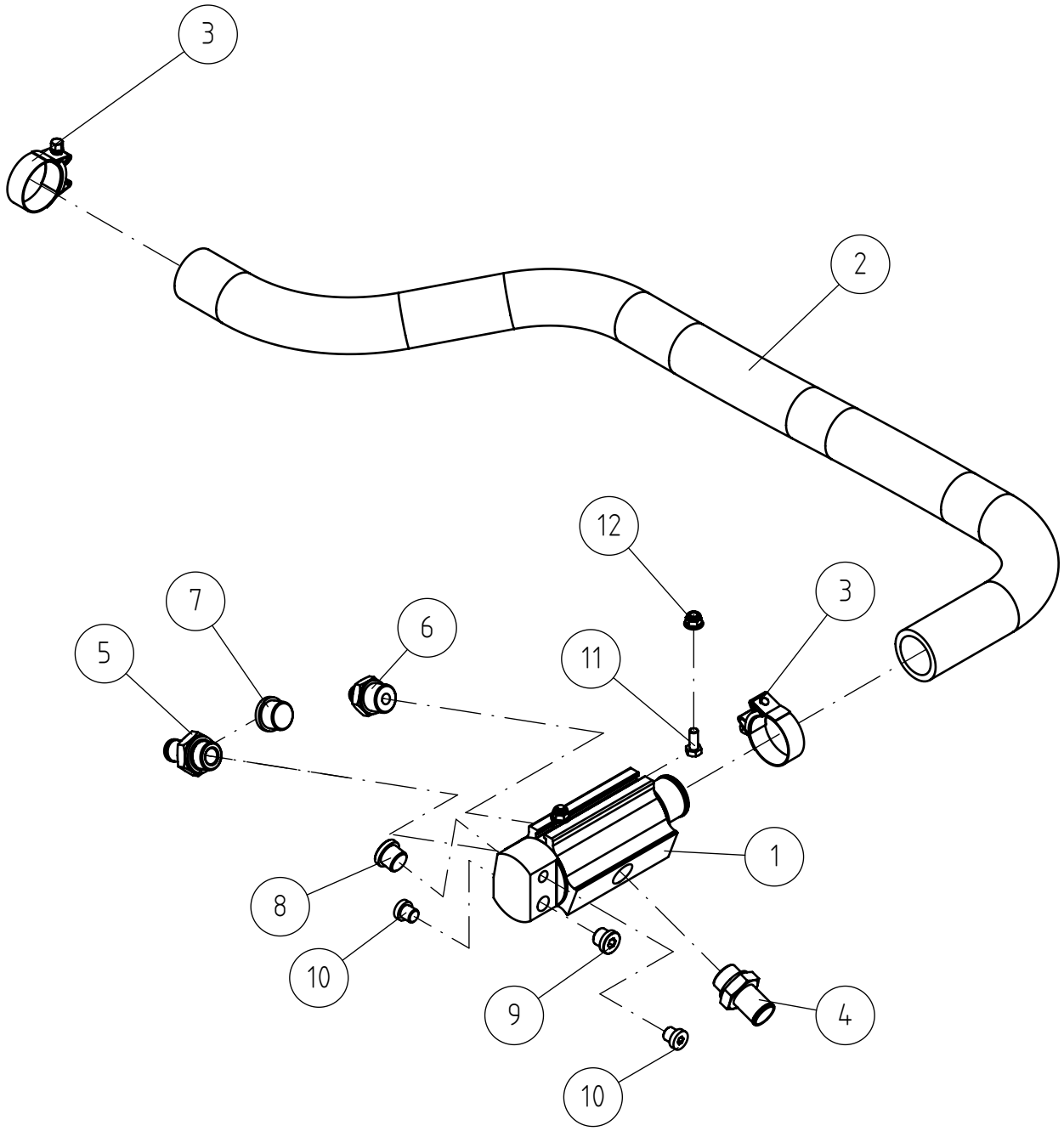

© This drawing is the property of Avant Tecno Oy.

© This drawing is the property of Avant Tecno Oy.

A450025 COARSE FILTER ASSEMBLY, OIL TANK

REF	PART NO	QTY	DESCRIPTION	NOTES	PAGE
1	A450772	1	HYDRAULIC MANIFOLD ASSEMBLY		-
2	A450144	1	INLET HOSE L=1200 LEGUAN 220		-
3	66013	2	PIPE CLAMP POWER-FLEX S-048-		-
4	66107	1	HOSE BARB R3/4"UK - 25 MM L=58		-
5	66427	1	HOSE BARB R3/4"UK - 20MM		-
6	64544	1	BASIC FITTING F40XS12-3/4		-
7	73768	1	HEXAGONAL PLUG HF-3/4" WITH SEAL		-
8	64174	1	HEXAGONAL DRAIN PLUG HF 1/2" WITH SEAL		-
9	74411	1	HEXAGONAL PLUG HF 3/8" HTUNG		-
10	64700	2	HEXAGONAL PLUG R 1/4"		-
11	72130	2	HEXAGONAL SCREW M8*20		-
12	A447717	2	HEXAGONAL NUT M8 NYLOC DIN 6926		-

© This drawing is the property of Avant Tecno Oy.

© This drawing is the property of Avant Tecno Oy.

A449395 OUTRIGGER ASSEMBLY LEGUAN 220

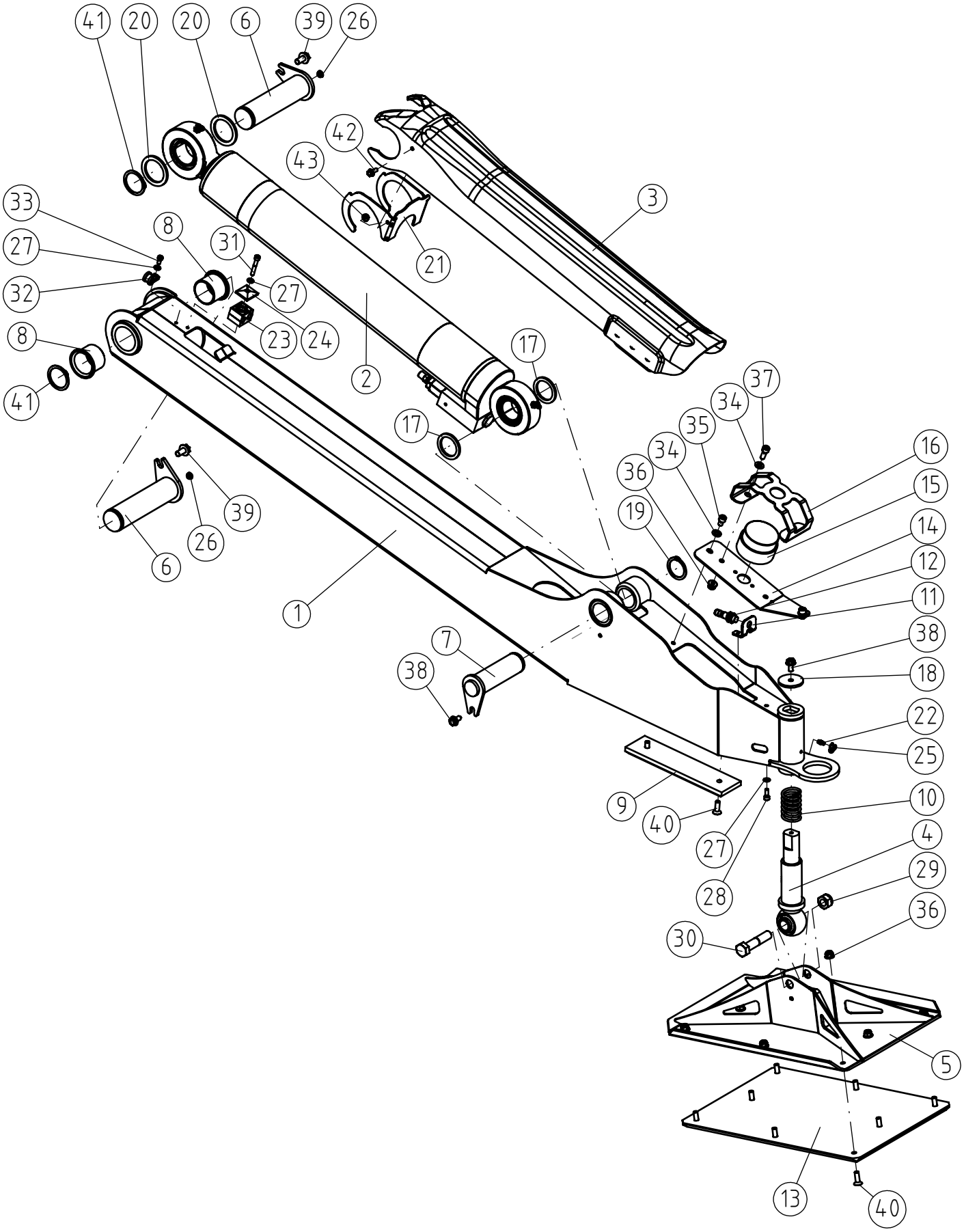

© This drawing is the property of Avant Tecno Oy.

© This drawing is the property of Avant Tecno Oy.

A449395 OUTRIGGER ASSEMBLY LEGUAN 220

REF	PART NO	QTY	DESCRIPTION	NOTES	PAGE
1	A449394	1	OUTRIGGER LEGUAN 220		-
2	A448927	1	OUTRIGGER CYLINDER ASSEMBLY LEGUAN 220		16
3	A449614	1	PROTECTIVE PLATE GREY OUTRIGGER CYLINDER		-
4	A449616	1	PIN, POSITION SENSOR		-
5	A449617	1	FOOT PLATE 500X300 OUTRIGGER LEGUAN 220		-
6	A450145	2	PIVOT PIN F45 L=168		-
7	A450135	1	PIVOT PIN F40 L=124		-
8	66190	2	SLIDE BEARING F50/F45-40		-
9	A419051	1	PLATE, PLASTIC, OUTRIGGER LEGUAN 135		-
10	A449859	1	COMPRESSION SPRING L=60		-
11	A449692	1	MOUNTRING BRACKET, SENSOR OUTRIGGER		-
12	66338	1	INDUCTIVE PROXIMITY SENSOR 9-36V/0,2A		-
13	A422170	1	PLASTIC PLATE SKID SHOE OUTRIGGER LEGUAN		-
14	A419284	1	COVER PLATE, OUTRIGGER LEGUAN		-
15	65417	1	BEACON LED, ORANGE		-
16	A420181	1	COVER PLATE, BLINKER OUTRIGGER LEGUAN		-
17	A421190	2	SPACER, OUTRIGGER LEGUAN		-
18	A450123	1	SPACER, OUTRIGGER		-
19	71280	1	SEEGER RING A40*1,75		-
20	A418134	2	SPACER D63*D45X3 LEGUAN		-
21	A446441	1	REINFORCEMENT PLATE, OUTRIGGER COVER		-
22	72799	1	GREASE NIPPLE M6		-
23	A456074	1	PIPE CLAMP 112/12		-
24	73769	1	COVER PLATE GD1-D, PIPE CLAMP		-
25	A456064	1	CAP, GREASE NIPPLE		-
26	A438420	2	PLUG M12 FOR ROUND TUBE		-
27	71680	4	WASHER M6 DIN 125		-
28	73766	2	HEXAGONAL HEAD SCREW M6*16 DIN 912 2 8.8		-
29	72330	1	HEXAGONAL NUT M16 NYLOC DIN 985		-
30	74680	1	HEXAGONAL SCREW M16*75 DIN 931		-
31	74438	1	HEXAGONAL HEAD SCREW M6*40 DIN 912		-
32	74570	1	PIPE CLAMP F11 MM		-
33	A445750	1	HEXAGONAL HEAD SCREW M6*12 DIN 7984		-
34	73122	4	WASHER M8 A8,4 DIN 125 ZN		-
35	74932	2	HEXAGONAL HEAD SCREW M8*12		-
36	A447717	10	HEXAGONAL NUT M8 NYLOC DIN 6926		-
37	74481	2	HEXAGONAL HEAD SCREW M8*20 DIN 912 ZN		-
38	A429200	2	HEXAGONAL SERRATED SCREW M8*16 WITH FLAN		-
39	A432196	2	HEXAGONAL SERRATED SCREW M10*20 W. FLANG		-
40	74462	10	HEXAGON SOCKET COUNT HEAD SCREW M8*25		-
41	73090	2	SEEGER RING A45*1,75		-
42	A431967	2	HEXAGONAL SERRATED SCREW M6*16 W. FLANG		-
43	A452923	2	HEXAGONAL NUT M6 DIN 6923		-

© This drawing is the property of Avant Tecno Oy.

© This drawing is the property of Avant Tecno Oy.

A448927 OUTRIGGER CYLINDER ASSEMBLY LEGUAN 220

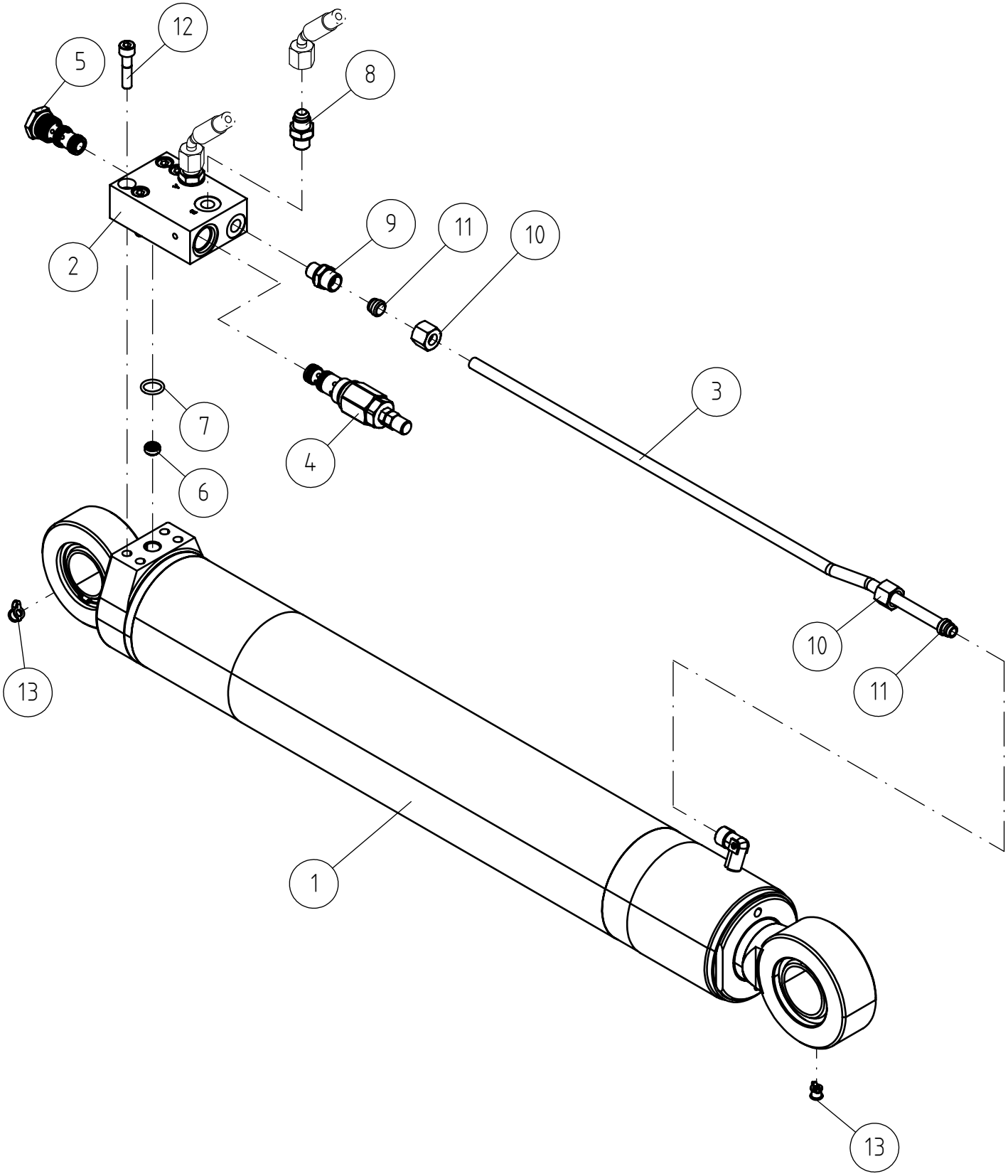

© This drawing is the property of Avant Tecno Oy.

© This drawing is the property of Avant Tecno Oy.

A448927 OUTRIGGER CYLINDER ASSEMBLY LEGUAN 220

REF	PART NO	QTY	DESCRIPTION	NOTES	PAGE
1	A448928	1	HYDRAULIC CYLINDER 90/56-600 LEGUAN		-
1.1	A458391	1	SEAL KIT HYDR. CYL. 90/56		-
2	A420293	1	SUBPLATE OUTRIGGER WITH LOAD CONTROL VAL		-
3	A449393	1	HYDRAULIC PIPE		-
4	64736	1	VALVE CARTRIDGE CA-10-	64736 Install torque 50 Nm	-
4.1	A443651	1	SEAL KIT LOAD CONTROL VALVE WALVOIL CA10		-
5	65115	1	CHECK VALVE CARTRIDGE	65115 Install torque 41 Nm	-
6	66296	1	RESTRICTOR CHECK VALVE CARTRIDGE 500BAR		-
7	74738	1	O-RING NBR F 15 * 2,50 72SH		-
8	64059	2	BASIC FITTING F40XS10-1/4		-
9	66369	1	BASIC FITTING 10MM-R1/4" UK /2		-
10	66365	2	FITTING NUT "M NUT" M10L M16*1,5		-
11	66366	2	CUTTING RING PROGRESSIVE STOP RING PSR10		-
12	74482	4	HEXAGONAL HEAD SCREW M8* 35 DIN 912		-
13	A456064	2	CAP, GREASE NIPPLE		-

© This drawing is the property of Avant Tecno Oy.

© This drawing is the property of Avant Tecno Oy.

A445848 TRANSMISSION ASSEMBLY LEGUAN 220

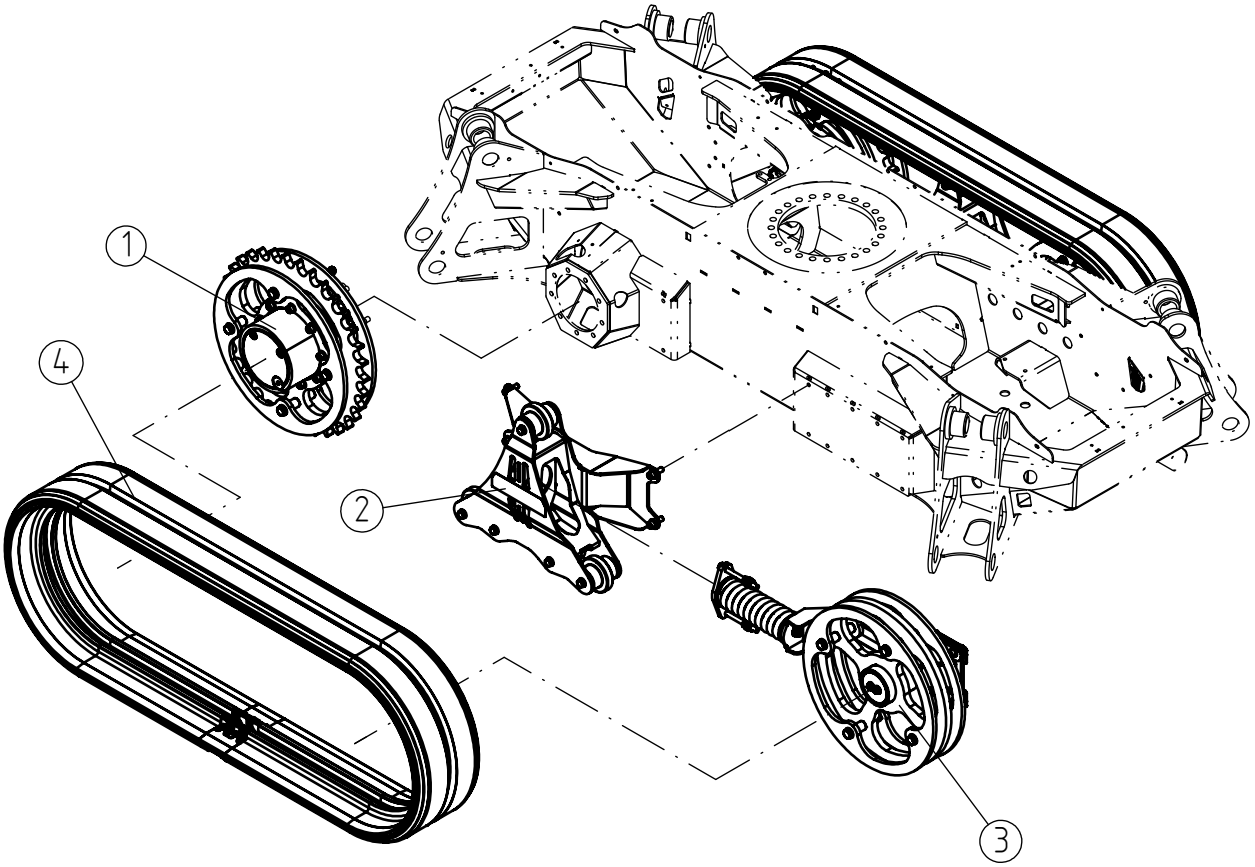

© This drawing is the property of Avant Tecno Oy.

© This drawing is the property of Avant Tecno Oy.

A445848 TRANSMISSION ASSEMBLY LEGUAN 220

REF	PART NO	QTY	DESCRIPTION	NOTES	PAGE
1	A454184	2	DRIVE MOTOR ASSEMBLY		20
2	A448814	2	TRACK TIGHTENER ASSEMBLY LEGUAN 220		24
3	A454183	2	IDLER WHEEL ASSEMBLY		26
4	A445012	2	RUBBER TRACK 230*48*76		-

© This drawing is the property of Avant Tecno Oy.

© This drawing is the property of Avant Tecno Oy.

A454184 DRIVE MOTOR ASSEMBLY

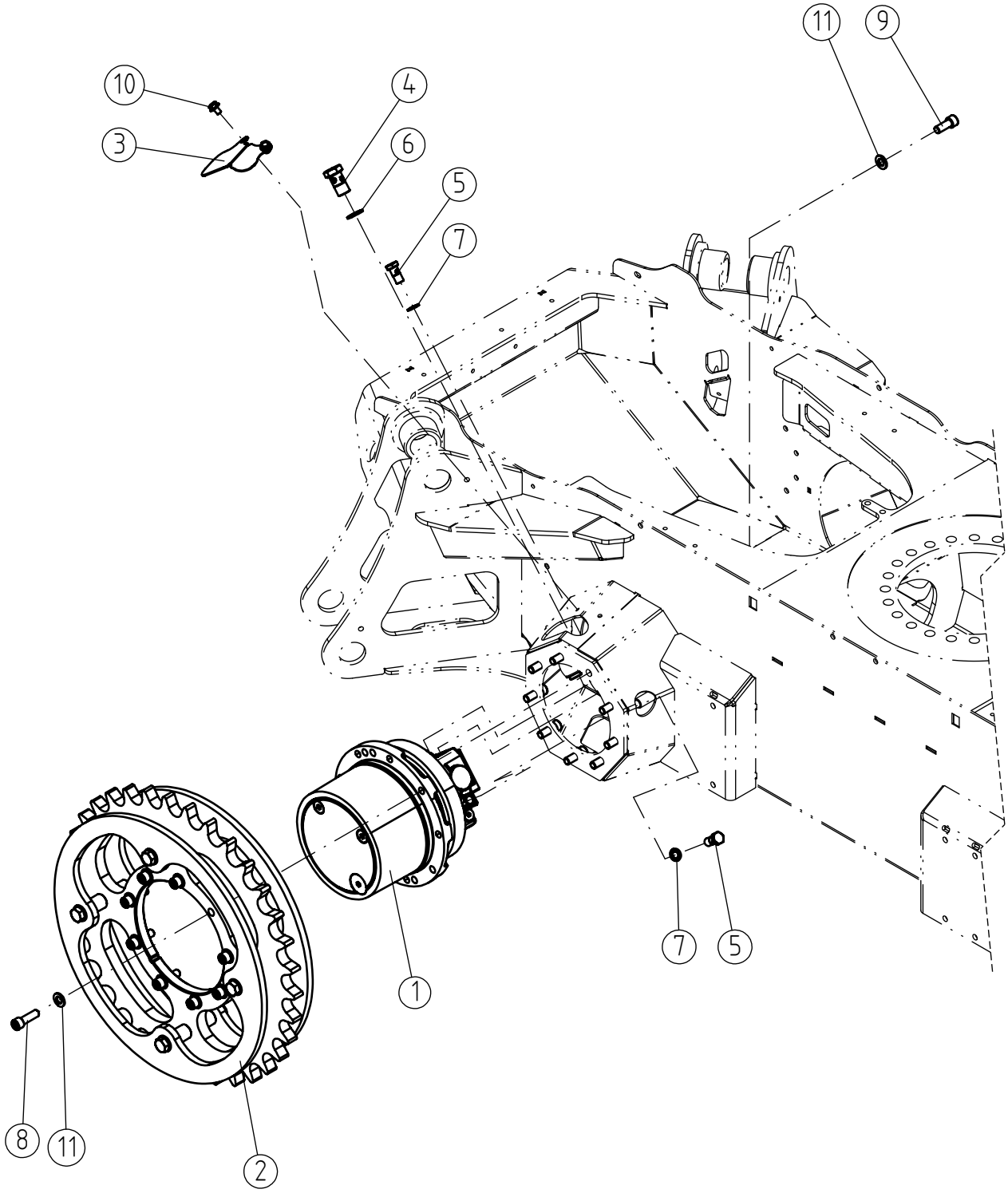

© This drawing is the property of Avant Tecno Oy.

© This drawing is the property of Avant Tecno Oy.

A454184 DRIVE MOTOR ASSEMBLY

REF	PART NO	QTY	DESCRIPTION	NOTES	PAGE
1	A446003	1	DRIVE MOTOR		-
1.1	A440002	1	EXTENSION FITTING 1/4"		-
2	A454825	1	WHEEL, DRIVE MOTOR		22
3	A455016	1	COVER PLATE, DRIVE MOTOR		-
4	73959	2	BANJO BOLT R 1/2"		-
5	64557	2	BANJO BOLT R 1/4"		-
6	73047	4	USIT SEAL RING R/12"		-
7	73757	4	USIT COMPRESSION R1/4"		-
8	74832	9	HEXAGONAL HEAD SCREW M12*40		-
9	74846	9	HEXAGONAL HEAD SCREW M12*30 DIN912		-
10	A429197	2	HEXAGONAL SERRATED SCREW M8*12 W. FLANGE		-
11	71691	18	WASHER M12 A13 DIN 125		-

© This drawing is the property of Avant Tecno Oy.

© This drawing is the property of Avant Tecno Oy.

A454825 WHEEL, DRIVE MOTOR

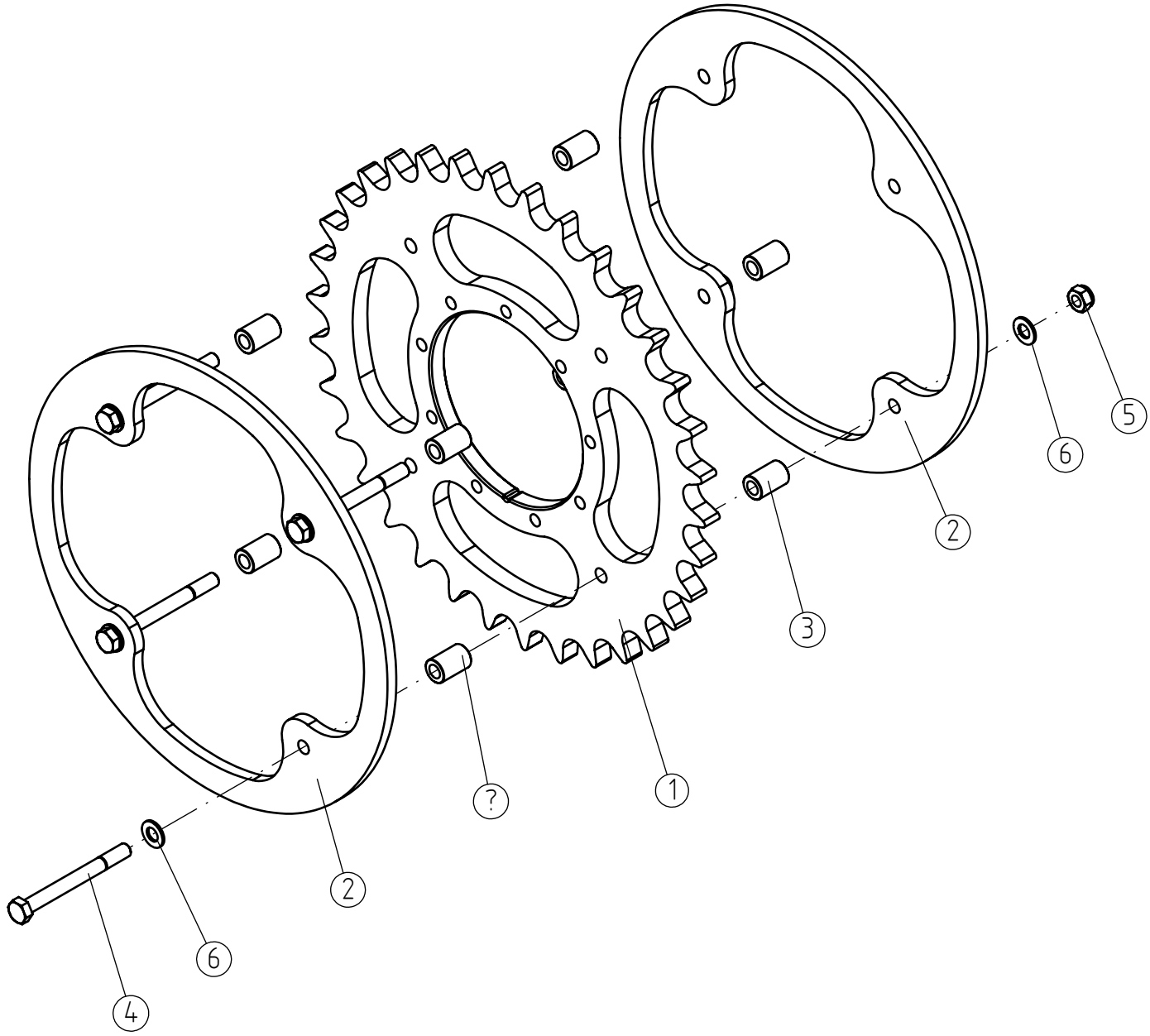

© This drawing is the property of Avant Tecno Oy.

© This drawing is the property of Avant Tecno Oy.

A454825 WHEEL, DRIVE MOTOR

REF	PART NO	QTY	DESCRIPTION	NOTES	PAGE
1	A454826	1	SPROCKET WHEEL, DRIVE WHEEL		-
2	A420605	2	SIDE PLATE DRIVE WHEEL RUBBER TRACKS		-
3	A454824	8	SPACER SLEEVE, WHEEL		-
4	A456519	4	HEXAGONAL SCREW M14*140 DIN 931		-
5	72327	4	HEXAGONAL NUT M 14 NYLOC DIN 985		-
6	73384	8	WASHER M14 A15 DIN 125 ZN		-

© This drawing is the property of Avant Tecno Oy.

© This drawing is the property of Avant Tecno Oy.

A448814 TRACK TIGHTENER ASSEMBLY LEGUAN 220

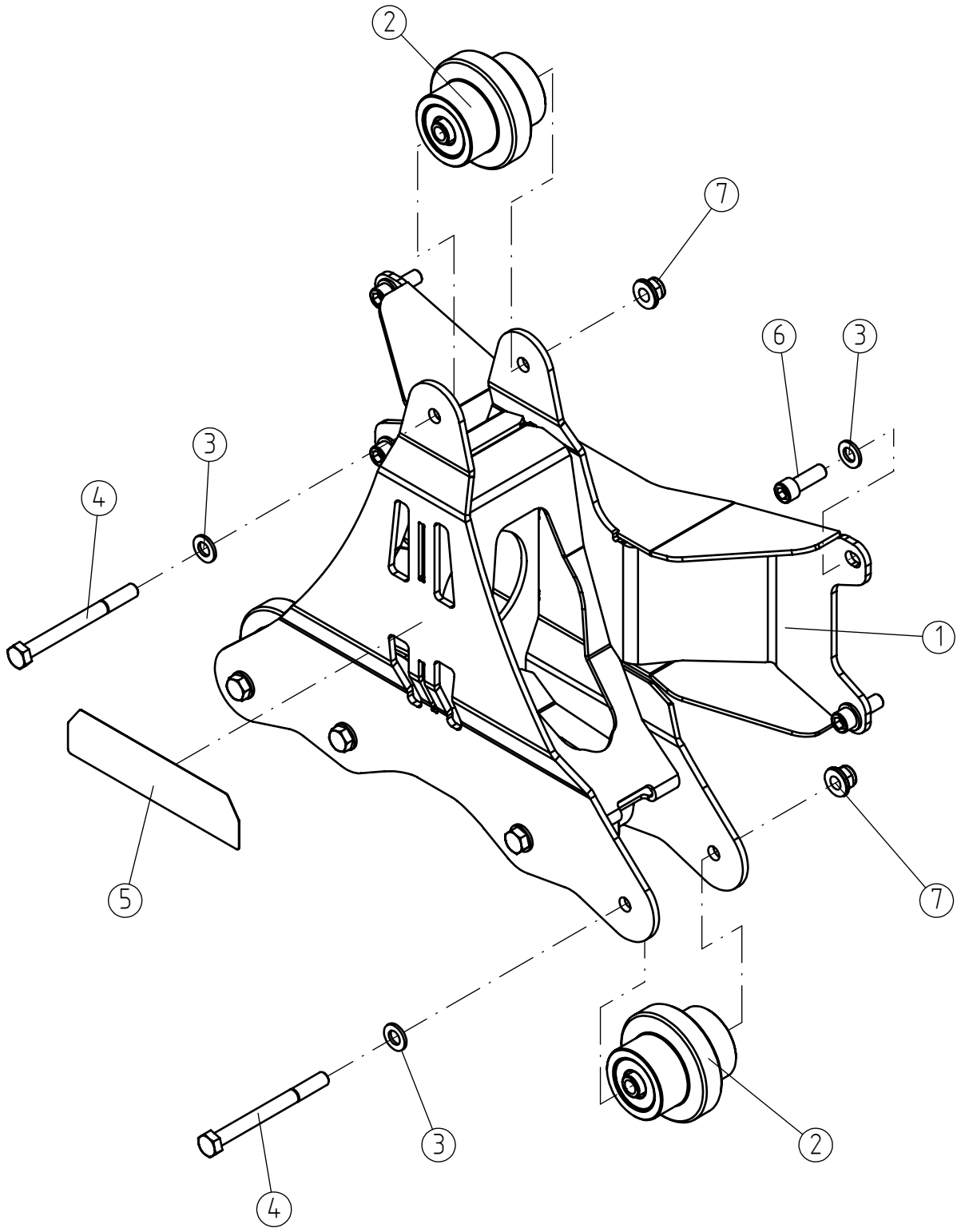

© This drawing is the property of Avant Tecno Oy.

© This drawing is the property of Avant Tecno Oy.

A448814 TRACK TIGHTENER ASSEMBLY LEGUAN 220

REF	PART NO	QTY	DESCRIPTION	NOTES	PAGE
1	A450853	1	TRACK FRAME		-
2	A453353	5	ROLLER ASSEMBLY		-
3	71691	9	WASHER M12 A13 DIN 125		-
4	74701	5	HEXAGONAL SCREW M12*130 DIN 931		-
5	A451370	1	DECAL TRACK FRAME		-
6	74876	4	HEXAGONAL HEAD SCREW M12*35 DIN912		-
7	A453357	5	HEXAGONAL NUT M12 NYLOC DIN 6923		-

© This drawing is the property of Avant Tecno Oy.

© This drawing is the property of Avant Tecno Oy.

A454183 IDLER WHEEL ASSEMBLY

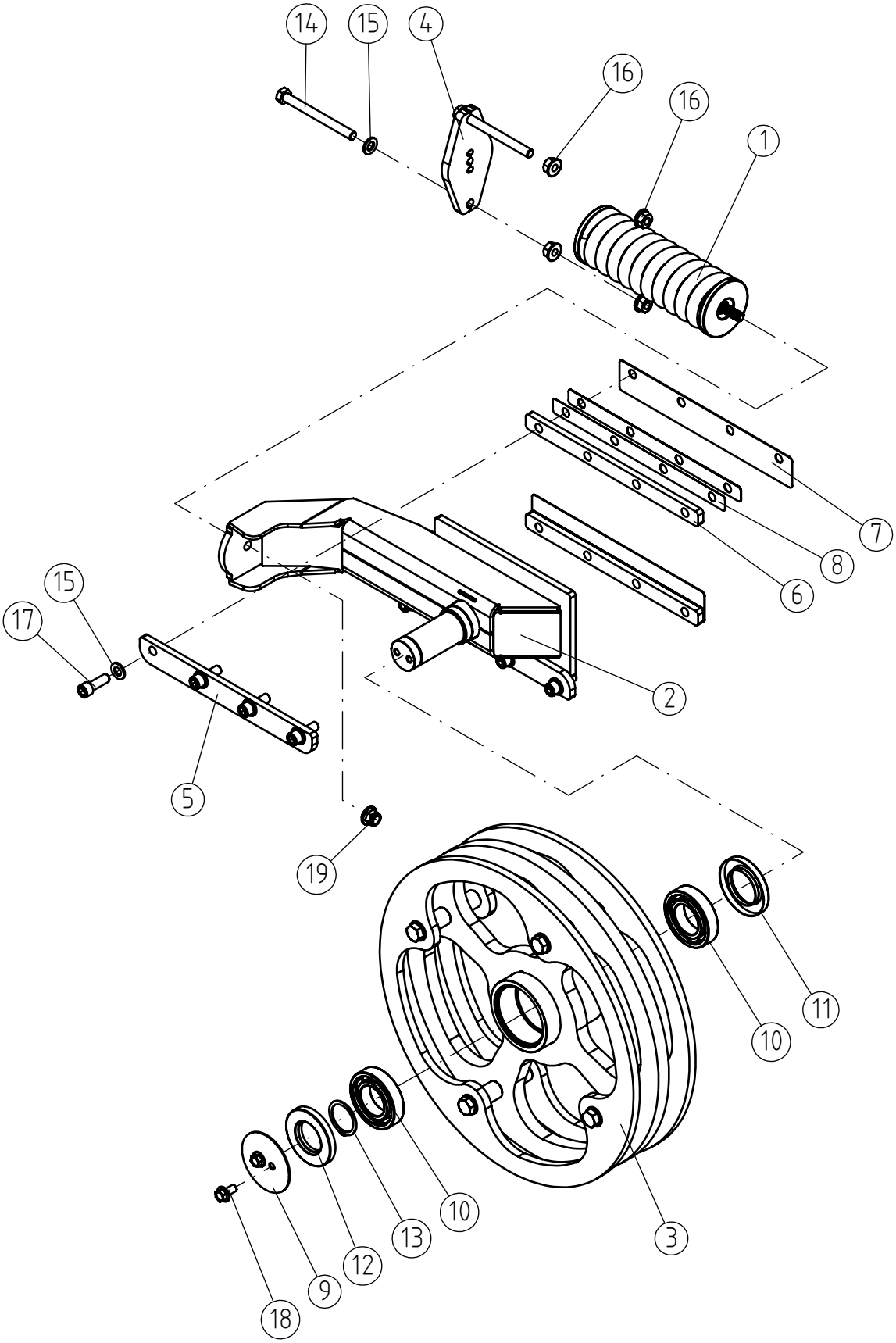

© This drawing is the property of Avant Tecno Oy.

© This drawing is the property of Avant Tecno Oy.

A454183 IDLER WHEEL ASSEMBLY

REF	PART NO	QTY	DESCRIPTION	NOTES	PAGE
1	A454072	1	SPRING ASSEMBLY, TIGHTENER		28
2	A450826	1	TIGHTENER, TRACKS		-
3	A454822	1	IDLER WHEEL		30
4	A454015	1	TIGHTENER PLATE, TRACKS		-
5	A450827	2	LOCKING PLATE, TIGHTENER		-
6	A450828	2	SPACER, TIGHTENER		-
7	A450829	2	SLIDE PLATE, TIGHTENER		-
8	A451703	6	SHIM PLATE, TIGHTENER		-
9	A451160	1	LOCKING PLATE, WHEEL BEARING		-
10	A454088	2	BALL BEARING 6209		-
11	A454019	1	SHAFT SEAL		-
12	A454020	1	SHAFT SEAL		-
13	73090	1	SEEGER RING A45*1,75		-
14	A451045	2	HEXAGONAL SCREW M12*130 DIN 933		-
15	71691	10	WASHER M12 A13 DIN 125		-
16	74784	4	HEXAGONAL NUT M12 WITH FLANGE		-
17	74876	8	HEXAGONAL HEAD SCREW M12*35 DIN912		-
18	A432196	2	HEXAGONAL SERRATED SCREW M10*20 W. FLANG		-
19	A453357	1	HEXAGONAL NUT M12 NYLOC DIN 6923		-

© This drawing is the property of Avant Tecno Oy.

© This drawing is the property of Avant Tecno Oy.

A454072 SPRING ASSEMBLY, TIGHTENER

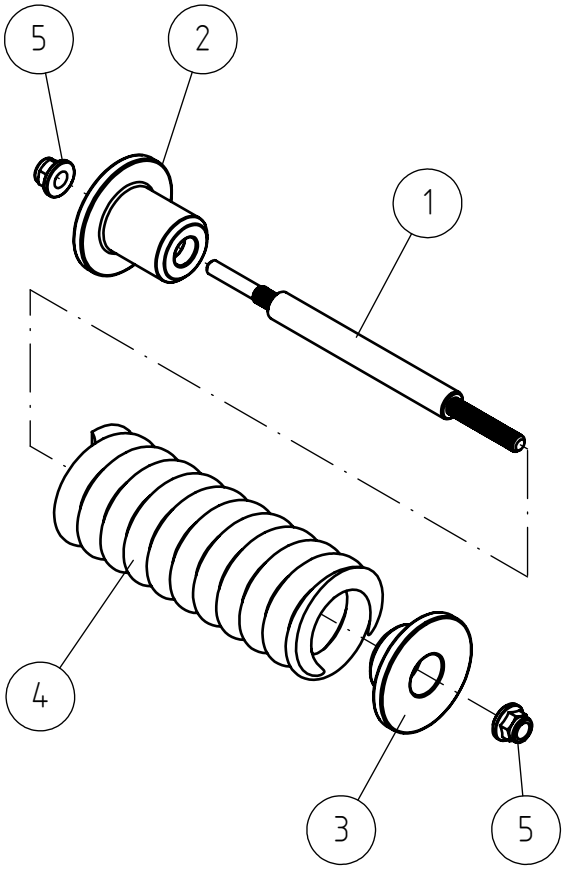

© This drawing is the property of Avant Tecno Oy.

© This drawing is the property of Avant Tecno Oy.

A454072 SPRING ASSEMBLY, TIGHTENER

REF	PART NO	QTY	DESCRIPTION	NOTES	PAGE
1	A454016	1	PIN, SPRING ASSEMBLY		-
2	A454012	1	GUIDE SLEEVE, SPRING ASSEMBLY		-
3	A454076	1	GUIDE SLEEVE, SPRING ASSEMBLY		-
4	A454099	1	COMPRESSION SPRING L=270		-
5	A453357	2	HEXAGONAL NUT M12 NYLOC DIN 6923		-

© This drawing is the property of Avant Tecno Oy.

© This drawing is the property of Avant Tecno Oy.

A454822 IDLER WHEEL

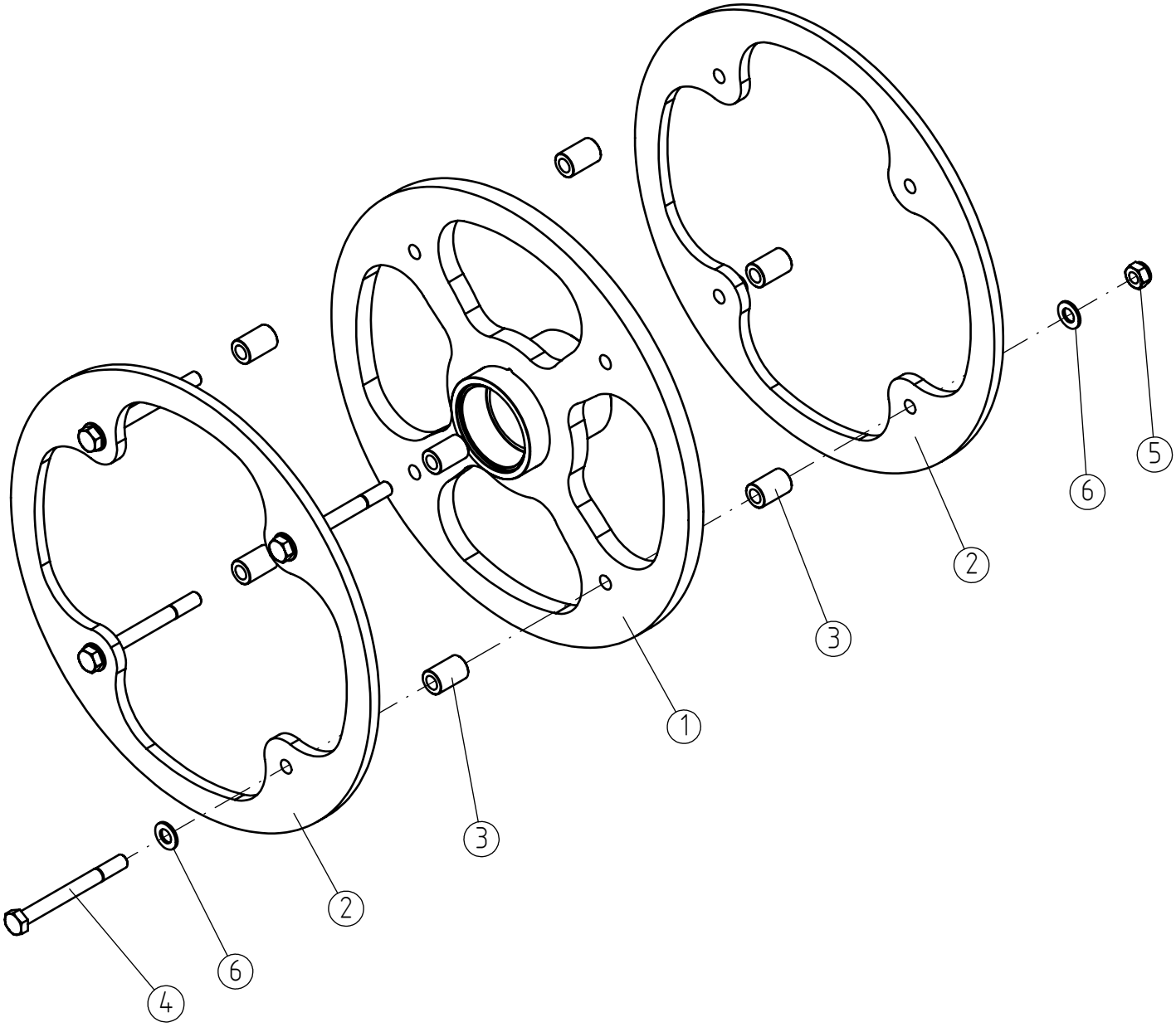

© This drawing is the property of Avant Tecno Oy.

© This drawing is the property of Avant Tecno Oy.

A454822 IDLER WHEEL

REF	PART NO	QTY	DESCRIPTION	NOTES	PAGE
1	A454827	1	MIDDLE PLATE, IDLER WHEEL		-
2	A420605	2	SIDE PLATE DRIVE WHEEL RUBBER TRACKS		-
3	A454824	8	SPACER SLEEVE, WHEEL		-
4	A456519	4	HEXAGONAL SCREW M14*140 DIN 931		-
5	72327	4	HEXAGONAL NUT M 14 NYLOC DIN 985		-
6	73384	8	WASHER M14 A15 DIN 125 ZN		-

© This drawing is the property of Avant Tecno Oy.

© This drawing is the property of Avant Tecno Oy.

A449453 ELECTRIC MOTOR 230V ASSEMBLY LEGUAN 220

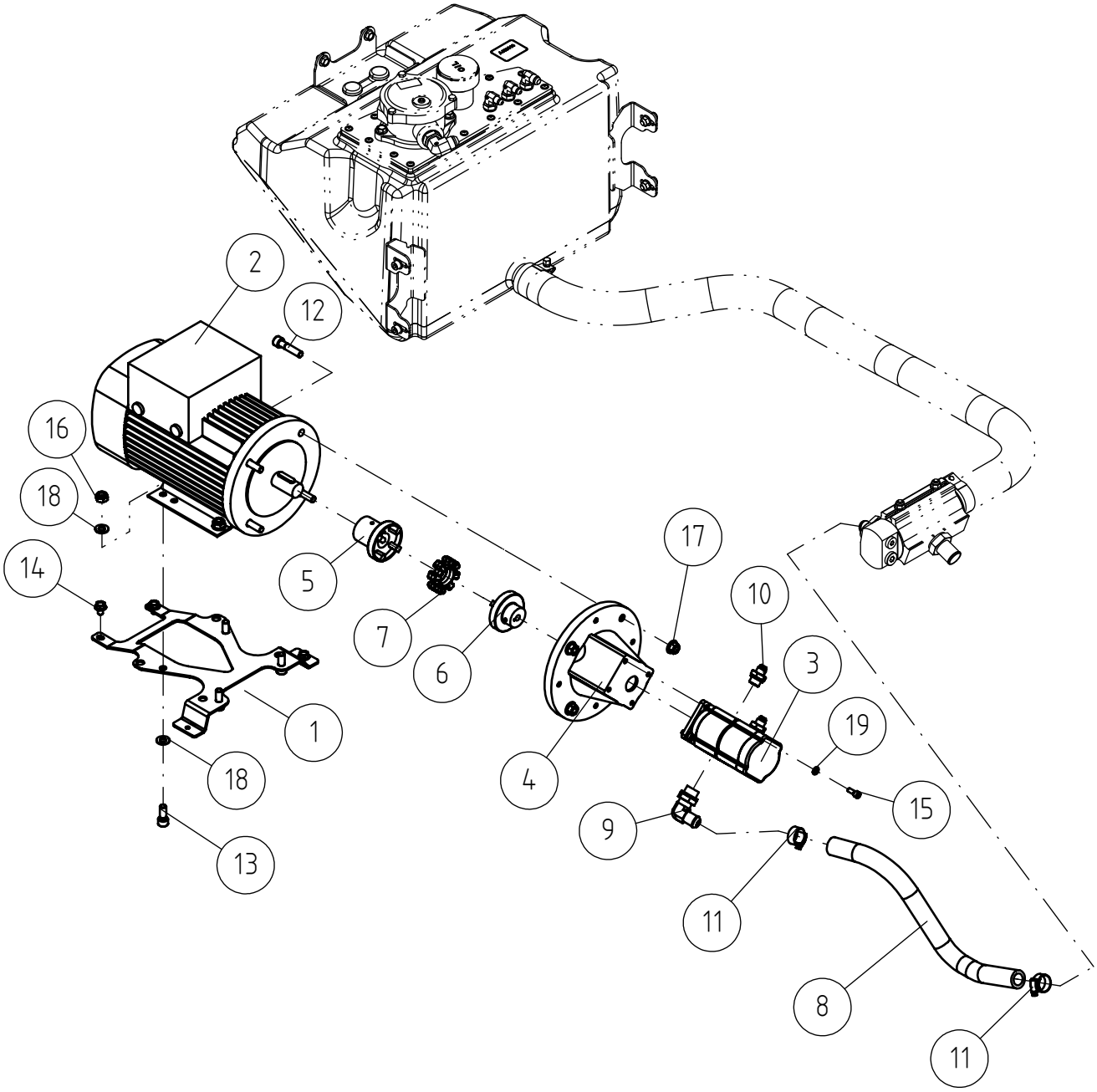

© This drawing is the property of Avant Tecno Oy.

© This drawing is the property of Avant Tecno Oy.

A449453 ELECTRIC MOTOR 230V ASSEMBLY LEGUAN 220

REF	PART NO	QTY	DESCRIPTION	NOTES	PAGE
1	A450072	1	MOUNTING PLATE ELECTRIC MOTOR		-
2	65191	1	ELECTRIC MOTOR 220V/2,2 KW		-
2.1	A438422	1	CAPACITOR 2X40 UF		-
2.2	A438423	1	COOLER FAN GRUNDFOS		-
3	66283	1	HYDRAULIC PUMP 1.5PE2,1/1,4D LEGUAN		-
4	65264	1	FLANGE, PUMP		-
5	65418	1	COUPLING, MOTOR SIDE		-
6	64372	1	HALF COUPLING F9,3		-
7	64299	1	RUBBER RING OMT R-62 IN COUPLING		-
8	A449454	1	INLET HOSE L=400 F19/29		-
9	A46403	1	SUCTION NIPPLE		-
10	64041	2	BASIC FITTING F40XS10-3/8 /8		-
11	73530	2	HOSE CLAMP 22-32 MM		-
12	A453083	4	HEXAGONAL HEAD SCREW M10*45 DIN 912		-
13	74466	4	HEXAGONAL HEAD SCREW M10* 25		-
14	A429197	3	HEXAGONAL SERRATED SCREW M8*12 W. FLANGE		-
15	73766	4	HEXAGONAL HEAD SCREW M6*16 DIN 912 2 8.8		-
16	72322	4	HEXAGONAL NUT M 10 NYLOC DIN 985		-
17	A453082	4	HEXAGONAL NUT M10 DIN 6923		-
18	73121	8	WASHER M10 A10,5 DIN 125 ZN		-
19	71680	4	WASHER M6 DIN 125		-

© This drawing is the property of Avant Tecno Oy.

© This drawing is the property of Avant Tecno Oy.

A450073 A449453 ELECTRIC MOTOR 120V ASSEMBLY

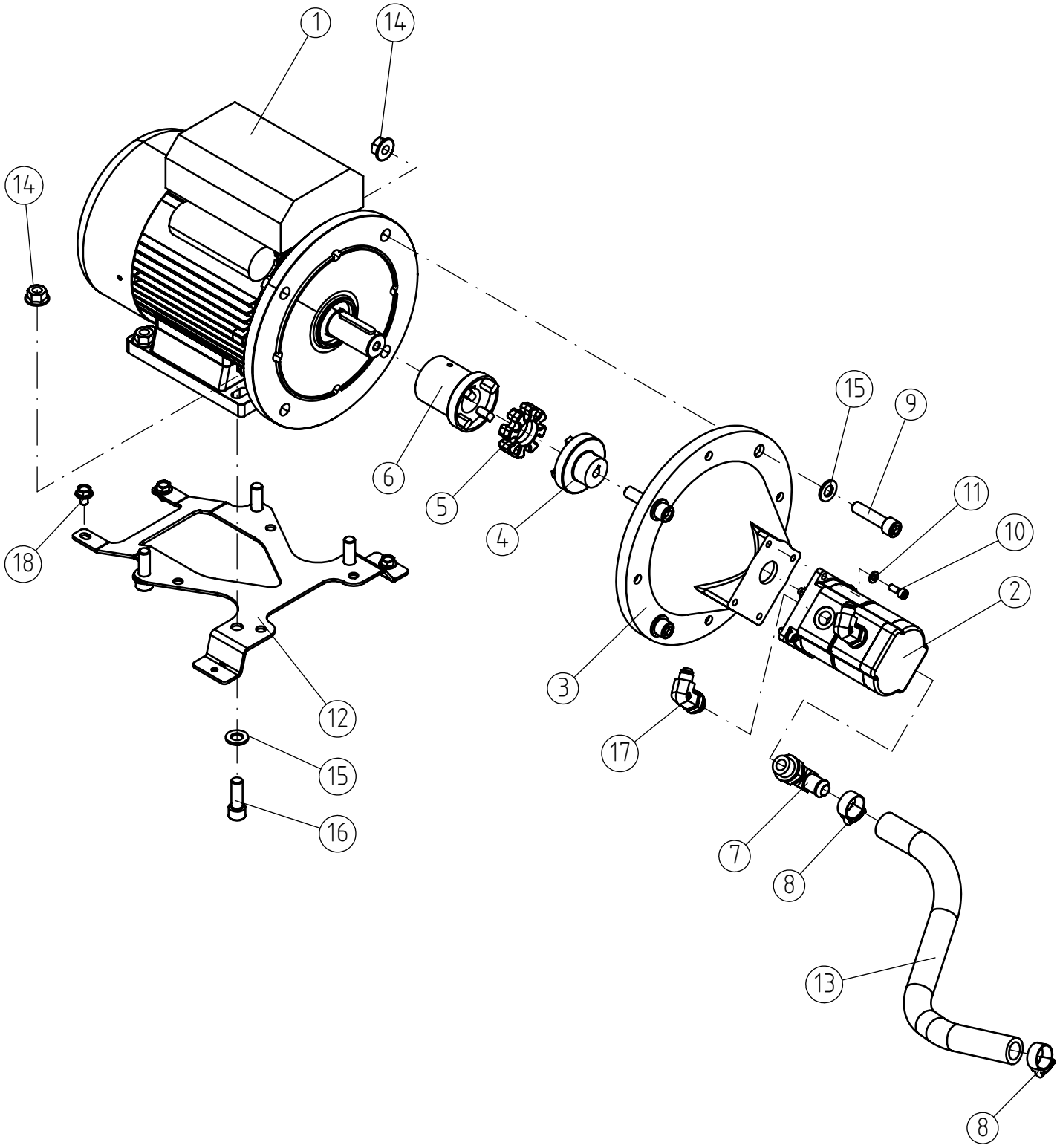

© This drawing is the property of Avant Tecno Oy.

© This drawing is the property of Avant Tecno Oy.

A450073 A449453 ELECTRIC MOTOR 120V ASSEMBLY

REF	PART NO	QTY	DESCRIPTION	NOTES	PAGE
1	A443239	1	ELECTRIC MOTOR 120V 60HZ		-
2	66283	1	HYDRAULIC PUMP 1.5PE2,1/1,4D LEGUAN		-
3	A443241	1	FLANGE, PUMP, ELECTRIC MOTOR- HYDR. PUMP		-
4	64372	1	HALF COUPLING F9,3		-
5	64299	1	RUBBER RING OMT R-62 IN COUPLING		-
6	A443648	1	COUPLING OMT ND 65C		-
7	A46403	1	SUCTION NIPPLE		-
8	73530	2	HOSE CLAMP 22-32 MM		-
9	75058	4	HEXAGONAL HEAD SCREW M12*50 DIN912 2		-
10	73766	4	HEXAGONAL HEAD SCREW M6*16 DIN 912 2 8.8		-
11	71680	4	WASHER M6 DIN 125		-
12	A450072	1	MOUNTING PLATE ELECTRIC MOTOR		-
13	A449454	1	INLET HOSE L=400 F19/29		-
14	A450048	8	HEXAGONAL NUT M12 WITH FLANGE		-
15	71691	8	WASHER M12 A13 DIN 125		-
16	74876	4	HEXAGONAL HEAD SCREW M12*35 DIN912		-
17	64044	2	ELBOW FITTING 90° C40XS10-3/8 /8		-
18	A429197	3	HEXAGONAL SERRATED SCREW M8*12 W. FLANGE		-

© This drawing is the property of Avant Tecno Oy.

© This drawing is the property of Avant Tecno Oy.

A450074 EXTRA WEIGHT ASSEMBLY, ELECTRIC MOTOR

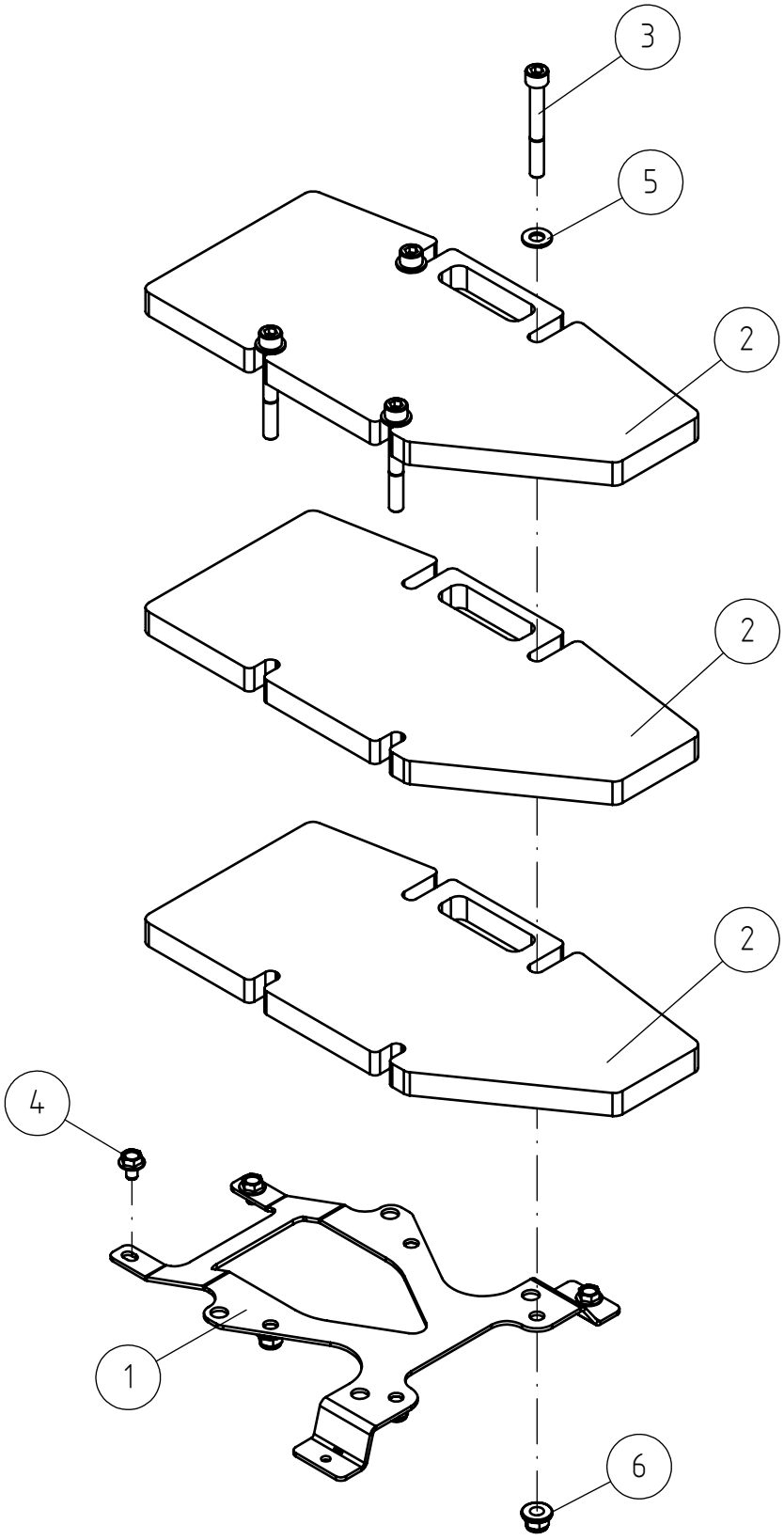

© This drawing is the property of Avant Tecno Oy.

© This drawing is the property of Avant Tecno Oy.

A450074 EXTRA WEIGHT ASSEMBLY, ELECTRIC MOTOR

REF	PART NO	QTY	DESCRIPTION	NOTES	PAGE
1	A450072	1	MOUNTING PLATE ELECTRIC MOTOR		-
2	A422418	3	EXTRA WEIGHT HYDRAULIC OIL TANK LEGUAN		-
3	A430624	4	HEXAGONAL HEAD SCREW M10*80 DIN 912 2		-
4	A429197	3	HEXAGONAL SERRATED SCREW M8*12 W. FLANGE		-
5	73121	4	WASHER M10 A10,5 DIN 125 ZN		-
6	A453721	4	HEXAGONAL NUT M10 NYLOC DIN 6923		-

© This drawing is the property of Avant Tecno Oy.

© This drawing is the property of Avant Tecno Oy.

A448251 REAR GRILLE ASSEMBLY LEGUAN 220

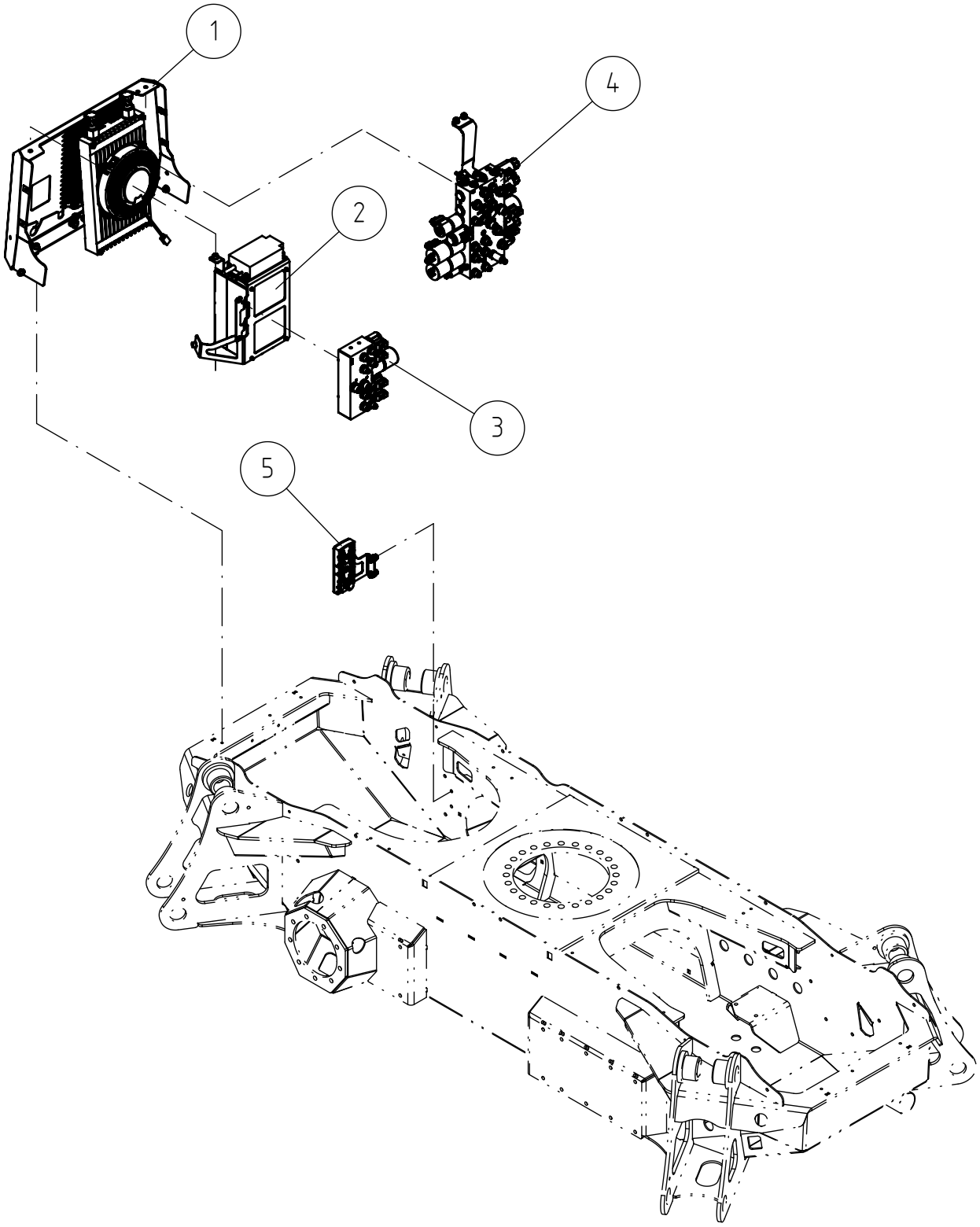

© This drawing is the property of Avant Tecno Oy.

© This drawing is the property of Avant Tecno Oy.

A448251 REAR GRILLE ASSEMBLY LEGUAN 220

REF	PART NO	QTY	DESCRIPTION	NOTES	PAGE
1	A445987	1	HYDRAULIC OIL COOLER ASSEMBLY LEGUAN 220		40
2	A450978	1	CONNECTION BOX 230V ASSEMBLY		42
3	A450075	1	CONTROL VALVE OUTRIGGERS LEGUAN 220		48
4	A450573	1	HYDRAULIC MANIFOLD ASSEMBLY, PUMP		50
5	A453079	1	SPLITTER BOX ASSEMBLY		52

© This drawing is the property of Avant Tecno Oy.

© This drawing is the property of Avant Tecno Oy.

A445987 HYDRAULIC OIL COOLER ASSEMBLY LEGUAN 220

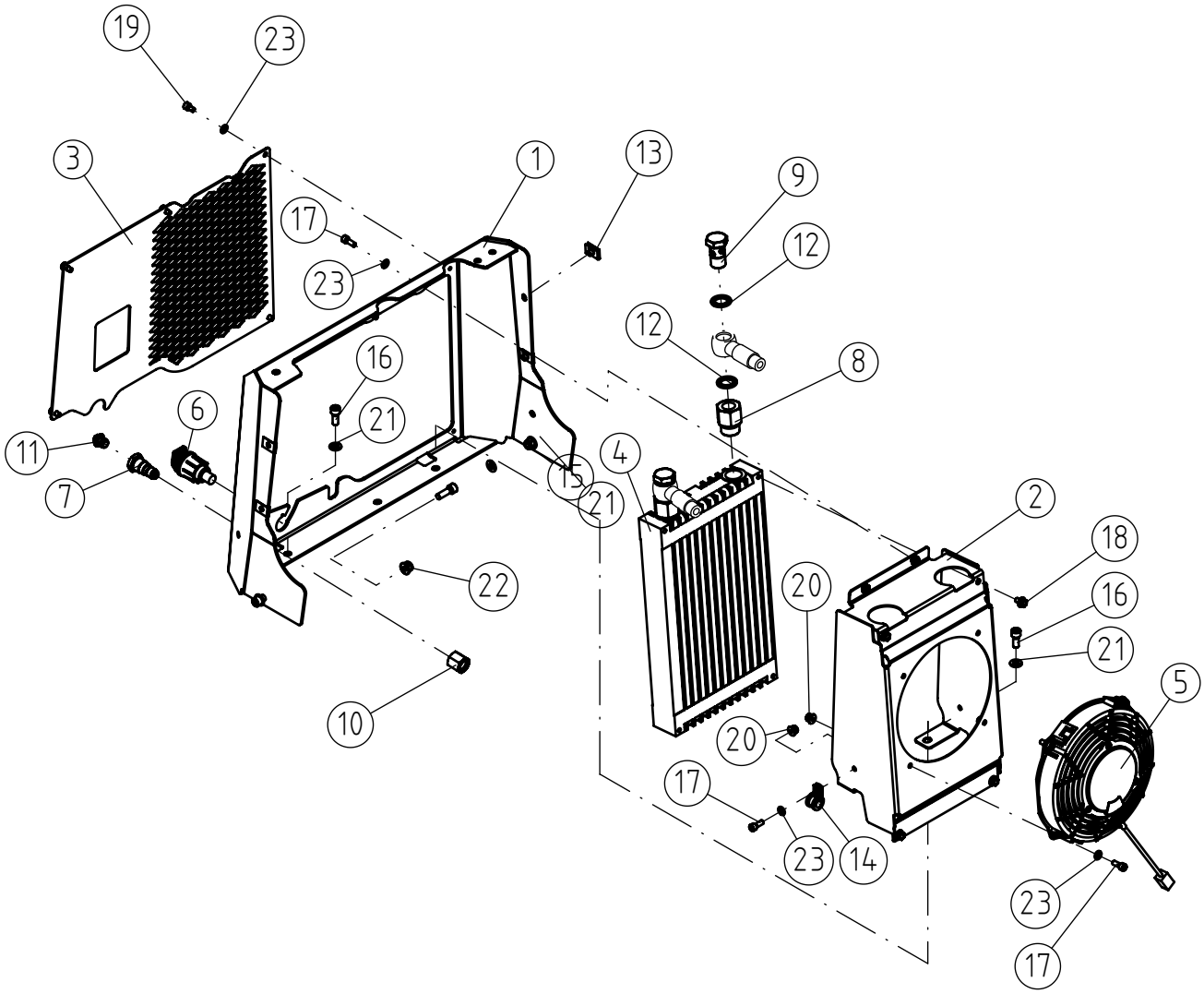

© This drawing is the property of Avant Tecno Oy.

© This drawing is the property of Avant Tecno Oy.

A445987 HYDRAULIC OIL COOLER ASSEMBLY LEGUAN 220

REF	PART NO	QTY	DESCRIPTION	NOTES	PAGE
1	A450940	1	FRAME REAR GRILLE LEGUAN 220		-
2	A449438	1	FAN HOUSING HYDR. OIL COOLER L220		-
3	A451437	1	REAR GRILLE LEGUAN 220		-
4	64939	1	OIL COOLER CELL ASA 350*205*45 600 SERIE		-
5	65953	1	FAN F190, 760I		-
6	65862	1	SOCKET DEFA MINIPLUG		-
7	A449387	1	LEAD-THROUGH FITTING G1/4" SK - 9/16" -		-
8	64172	2	REDUCER FITTING RI 3/4" - EDX 1/2"		-
9	73959	2	BANJO BOLT R 1/2"		-
10	64052	1	BINDING NUT BTXS12		-
11	A454927	1	PLASTIC PLUG R1/4"		-
12	73047	4	USIT SEAL RING R/12"		-
13	74807	4	SPEED NUT M6, FOR 0.5-4.0 MM PLATE		-
14	74570	1	PIPE CLAMP F11 MM		-
15	71884	2	HEXAGONAL HEAD SCREW M 8*25 DIN 912 2		-
16	74481	3	HEXAGONAL HEAD SCREW M8*20 DIN 912 ZN		-
17	73766	7	HEXAGONAL HEAD SCREW M6*16 DIN 912 2 8.8		-
18	A431969	4	HEXAGONAL SERRATED SCREW M6*10 W. FLANG		-
19	75089	5	HEXAGONAL HEAD SCREW M6*10 DIN912 2		-
20	A450669	5	NUT M6 NYLOC DIN 6926		-
21	73122	5	WASHER M8 A8,4 DIN 125 ZN		-
22	A447717	2	HEXAGONAL NUT M8 NYLOC DIN 6926		-
23	71680	12	WASHER M6 DIN 125		-

© This drawing is the property of Avant Tecno Oy.

© This drawing is the property of Avant Tecno Oy.

A450978 CONNECTION BOX 230V ASSEMBLY

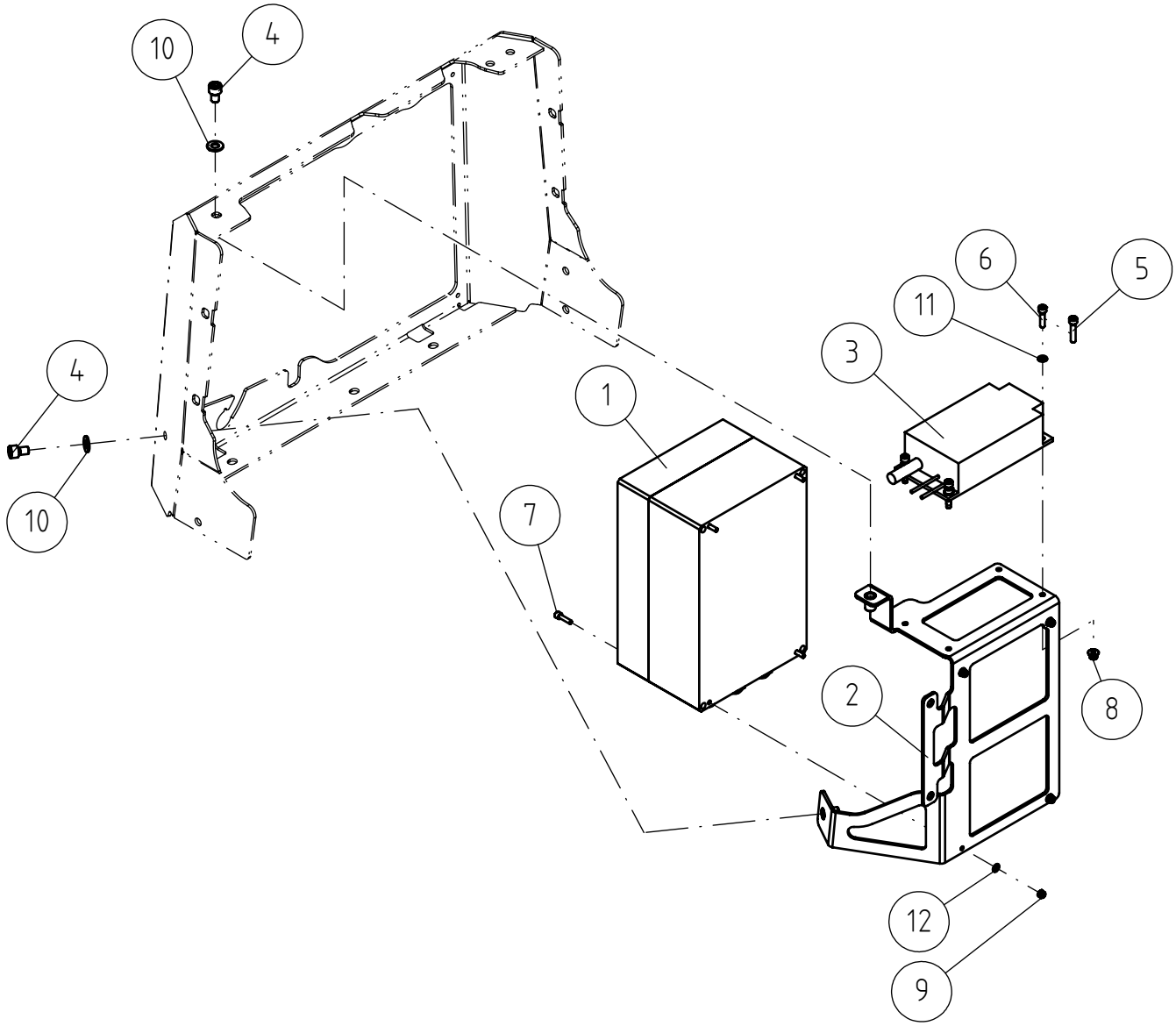

© This drawing is the property of Avant Tecno Oy.

© This drawing is the property of Avant Tecno Oy.

A450978 CONNECTION BOX 230V ASSEMBLY

REF	PART NO	QTY	DESCRIPTION	NOTES	PAGE
1	A450274	1	CONNECTION BOX 230V EQUIPPED LEGUAN 220		44
1	A458415	1	CONNECTION BOX 120V ASSEMBLY		46
2	A455674	1	MOUNTING BRACKET, 230V BOX		-
3	65183	1	BATTERY CHARGER 12V/6A 100W		-
4	74932	2	HEXAGONAL HEAD SCREW M8*12		-
5	75095	4	HEXAGONAL HEAD SCREW M5*25 DIN912 2		-
6	75094	4	HEXAGONAL HEAD SCREW M5*20 DIN912 2		-
7	74469	4	HEXAGONAL HEAD SCREW M4*16 DIN 912 ZN		-
8	A447716	4	HEXAGONAL NUT M5 NYLOC DIN 6926		-
9	72313	4	HEXAGONAL NUT M4 DIN 985 NYLOC		-
10	73122	2	WASHER M8 A8,4 DIN 125 ZN		-
11	74448	4	WASHER M5 A5,3 DIN 125 ZN		-
12	75097	4	WASHER M4 A4,3 DIN 125		-

© This drawing is the property of Avant Tecno Oy.

© This drawing is the property of Avant Tecno Oy.

A450274 CONNECTION BOX 230V EQUIPPED LEGUAN 220

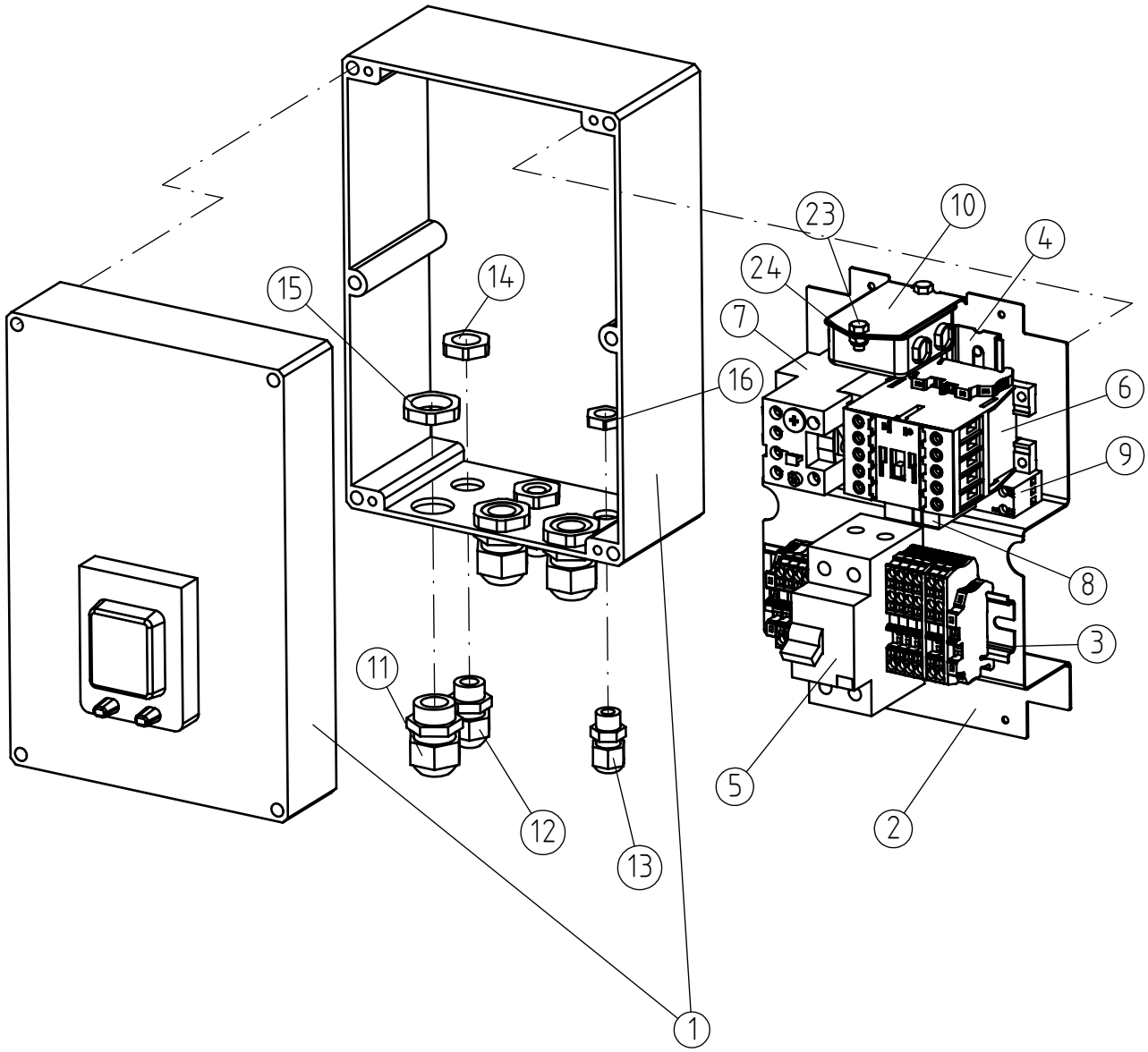

© This drawing is the property of Avant Tecno Oy.

© This drawing is the property of Avant Tecno Oy.

A450274 CONNECTION BOX 230V EQUIPPED LEGUAN 220

REF	PART NO	QTY	DESCRIPTION	NOTES	PAGE
1	A410187	1	BOX		-
1.1	A438611	1	LID CONTROL BOX		-
2	A410188	1	MOUNTING PLATE		-
3	A410189	1	DIN RAIL		-
4	A418735	1	DIN RAIL		-
5	A431587	1	RESIDUAL CURRENT DEVICE 25A 30MA		-
6	65186	1	CONTACTOR MONITORING DEVICE		-
7	65185	1	RELAY, OVERLOAD PROTECTION		-
8	65867	1	RELAY C10-A10X/AC230V		-
9	65870	1	RELAY SOCKET RELECO S10		-
10	66116	1	NETWORK FILTER (EMI) 250VAC/50HZ/6A		-
11	74891	3	CAP NUT CABLE GLAND, PLASTIC PG13.5		-
12	74889	2	CAP NUT CABLE GLAND, PLASTIC PG9		-
13	A425080	1	CABLE GLAND M12		-
14	74894	2	LOCK NUT PG9		-
15	74896	3	LOCK NUT PG13.5		-
16	A435906	1	LOCK NUT M12X1.5		-
17	A435219	1	TERMINAL BLOCK, ST 2,5 TWIN PE		-
18	A435218	4	TERMINAL BLOCK, ST 2,5 TWIN		-
19	A435217	1	TERMINAL BLOCK, ST 2,5		-
20	A442411	3	END PLATE CLIPFIX 35-5		-
21	A435220	1	END COVER, D-ST 2,5 TWIN		-
22	A442430	1	END COVER, D-ST 2,5		-
23	75160	2	HEXAGONAL SCREW M5*10 DIN 933		-
24	72315	2	NUT M5 NYLOC DIN 985		-

© This drawing is the property of Avant Tecno Oy.

© This drawing is the property of Avant Tecno Oy.

A458415 CONNECTION BOX 120V ASSEMBLY

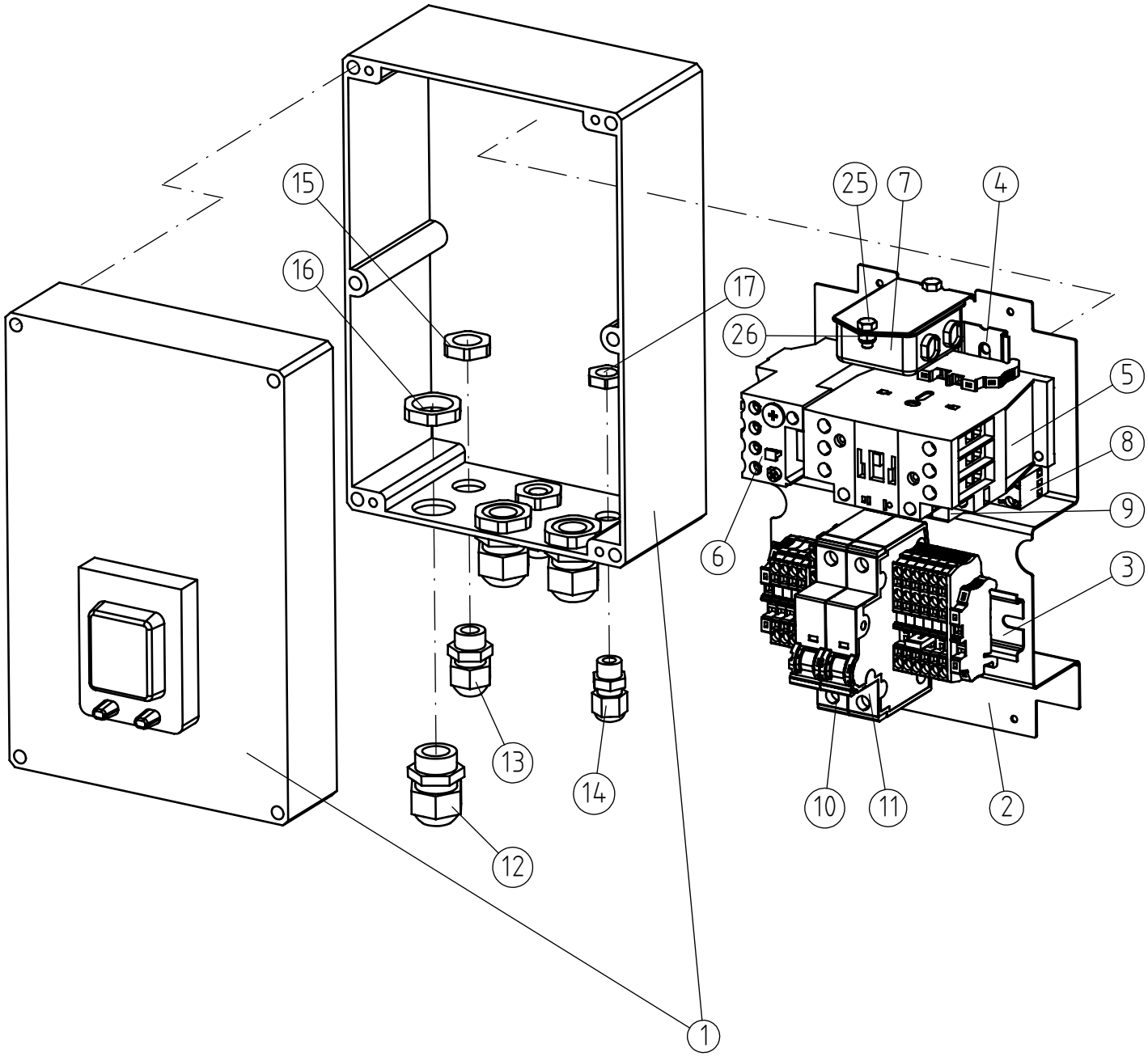

© This drawing is the property of Avant Tecno Oy.

© This drawing is the property of Avant Tecno Oy.

A458415 CONNECTION BOX 120V ASSEMBLY

REF	PART NO	QTY	DESCRIPTION	NOTES	PAGE
1	A410187	1	BOX		-
1.1	A438611	1	LID CONTROL BOX		-
2	A410188	1	MOUNTING PLATE		-
3	A410189	1	DIN RAIL		-
4	A418735	1	DIN RAIL		-
5	A443789	1	CONTACTOR MONITORING DEVICE DILM25-10		-
6	A443790	1	OVERLOAD RELAY ZB32-24		-
7	66116	1	NETWORK FILTER (EMI) 250VAC/50HZ/6A		-
8	65870	1	RELAY SOCKET RELECO S10		-
9	A443783	1	RELAY C10-A10X/AC120V		-
10	A443793	1	RESIDUAL CURRENT CIRCUIT BREAKER B20		-
11	A443792	1	RESIDUAL CURRENT CIRCUIT BREAKER B10		-
12	74891	3	CAP NUT CABLE GLAND, PLASTIC PG13.5		-
13	74889	2	CAP NUT CABLE GLAND, PLASTIC PG9		-
14	A425080	1	CABLE GLAND M12		-
15	74894	2	LOCK NUT PG9		-
16	74896	3	LOCK NUT PG13.5		-
17	A435906	1	LOCK NUT M12X1.5		-
18	A435220	2	END COVER, D-ST 2,5 TWIN		-
19	A435218	2	TERMINAL BLOCK, ST 2,5 TWIN		-
20	A442430	1	END COVER, D-ST 2,5		-
21	A435219	1	TERMINAL BLOCK, ST 2,5 TWIN PE		-
22	A435217	1	TERMINAL BLOCK, ST 2,5		-
23	A442411	3	END PLATE CLIPFIX 35-5		-
24	A435224	1	PLUG-IN BRIDGE FBS 2-5		-
25	75160	2	HEXAGONAL SCREW M5*10 DIN 933		-
26	72315	2	NUT M5 NYLOC DIN 985		-

© This drawing is the property of Avant Tecno Oy.

© This drawing is the property of Avant Tecno Oy.

A450075 CONTROL VALVE OUTRIGGERS LEGUAN 220

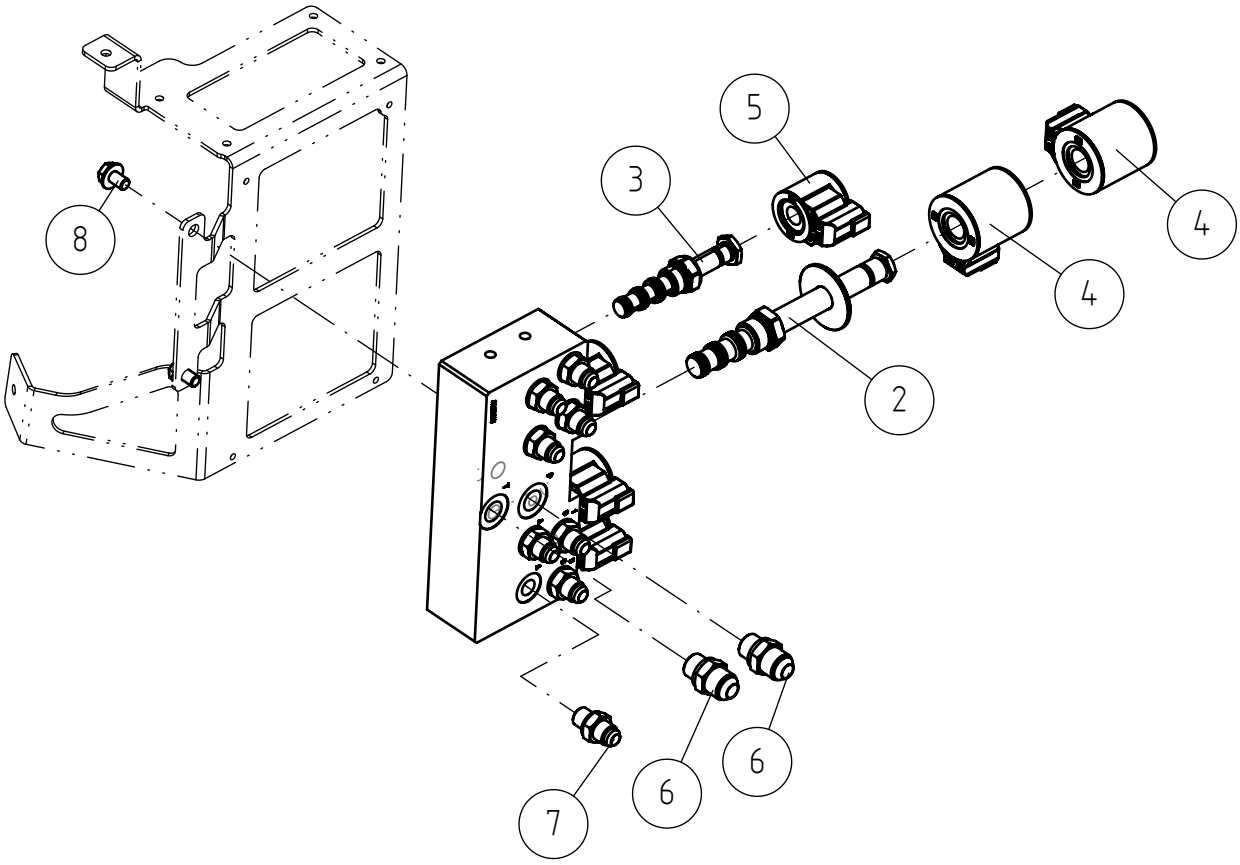

© This drawing is the property of Avant Tecno Oy.

© This drawing is the property of Avant Tecno Oy.

A450075 CONTROL VALVE OUTRIGGERS LEGUAN 220

REF	PART NO	QTY	DESCRIPTION	NOTES	PAGE
1	A429607	1	SUBPLATE OUTRIGGERS LEGUAN 135 NEO		-
2	66457	1	SOLENOID VALVE 4-WAY 3-POSITION MOTOR SP	66457 Install torque 35 Nm, end nut 8 Nm	-
2.1	A443088	1	SEAL KIT VALVE CARTRIDGE SK10-4N-MMM		-
3	A434708	4	DIRECTIONAL VALVE CARTRIDGE 4/2		-
3.1	A443085	1	SEAL KIT VALVE CARTRIDGE SK08-4N-MMM		-
4	A444555	2	SOLENOID 12V DEUTSCH CONNECTOR 10		-
5	A444551	4	SOLENOID 12V DEUTSCH CONNECTOR 08		-
6	64042	2	BASIC FITTING F40XS12-3/8 /8		-
7	64059	8	BASIC FITTING F40XS10-1/4		-
8	A429197	2	HEXAGONAL SERRATED SCREW M8*12 W. FLANGE		-

© This drawing is the property of Avant Tecno Oy.

© This drawing is the property of Avant Tecno Oy.

A450573 HYDRAULIC MANIFOLD ASSEMBLY, PUMP

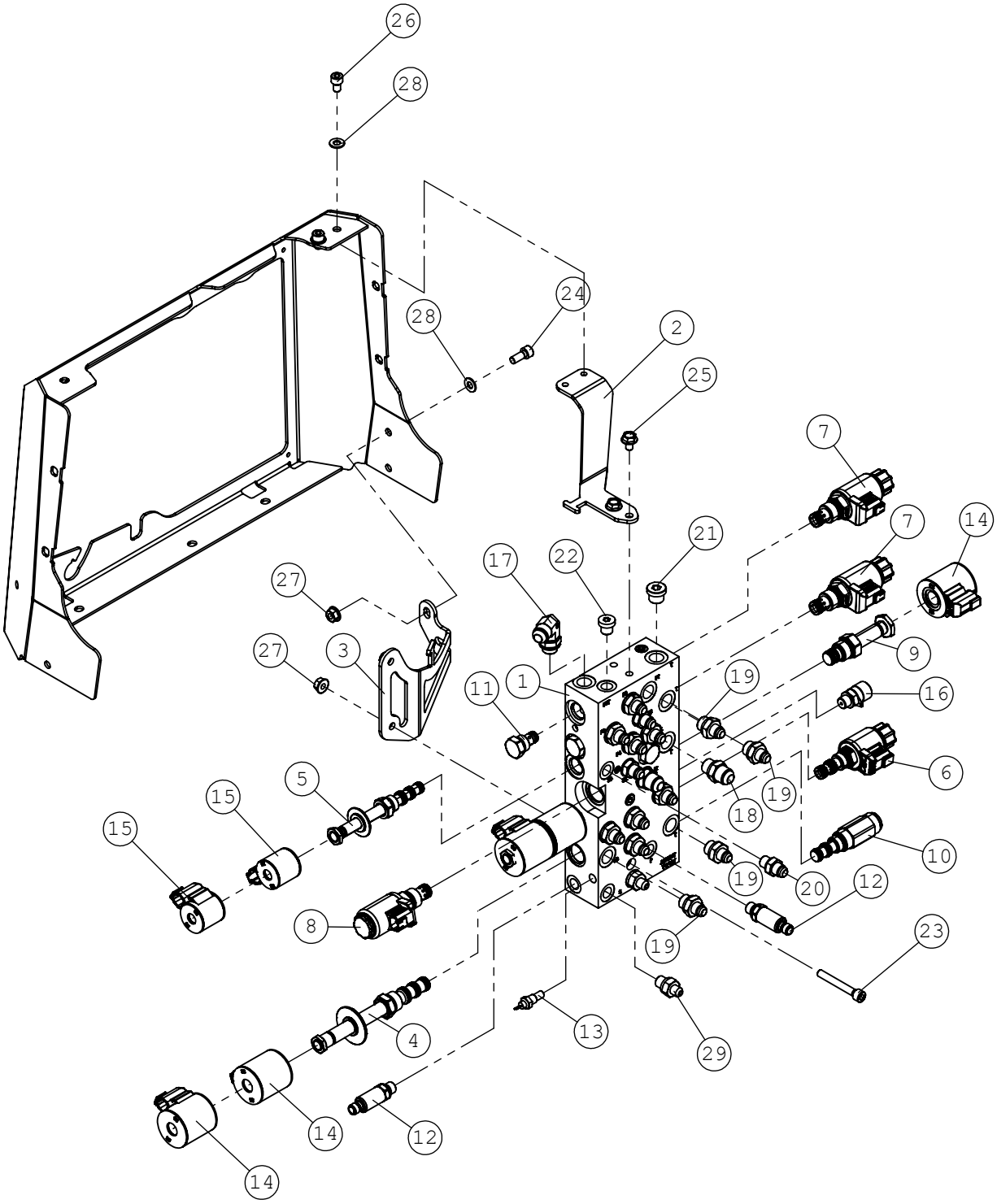

© This drawing is the property of Avant Tecno Oy.

© This drawing is the property of Avant Tecno Oy.

A450573 HYDRAULIC MANIFOLD ASSEMBLY, PUMP

REF	PART NO	QTY	DESCRIPTION	NOTES	PAGE
1	A450567	1	HYDRAULIC MANIFOLD, PUMP MANIFOLD		-
2	A448735	1	MOUNTING BRACKET UPPER, PUMP MANIFOLD		-
3	A449451	1	MOUNTING BRACKET, PUMP MANIFOLD		-
4	A447807	2	PROPORTIONAL VALVE 3-WAY		-
5	A445539	1	PROPORTIONAL VALVE CARTRIDGE 4/3		-
6	A447788	1	DIRECTIONAL VALVE 2-WAY		-
7	66459	2	SOLENOID VALVE 2-WAY 2-POSITION	66459 Install torque 50 Nm, end nut 5 Nm	-
8	A447323	1	SOLENOID VALVE 2-WAY		-
9	A434706	1	VALVE CARTRIDGE, PRESSURE RELIEF	A434706 Install torque 35 Nm, end nut 6 Nm	-
9.1	A443086	1	SEAL KIT VALVE CARTRIDGE		-
10	A450254	1	PRESSURE REDUCING CARTRIDGE		-
11	A428554	9	CHECK VALVE CARTRIDGE, POPPET TYPE	A428554 Install torque 26 Nm	-
11.1	A443082	1	SEAL KIT VALVE CARTRIDGE		-
12	66039	2	PRESSURE SENSOR 600BAR	66039 Install torque 35 Nm	-
13	64486	1	SENSOR, TEMP. GAUGE COBO	64486 Install torque 25 Nm	-
14	A444555	5	SOLENOID 12V DEUTSCH CONNECTOR 10		-
15	A444551	2	SOLENOID 12V DEUTSCH CONNECTOR 08		-
16	64196	1	MANOMETER FITTING M16*2		-
17	64068	1	ELBOW FITTING 90 DEGR. C40XS12-3/8 /8		-
18	64042	2	BASIC FITTING F40XS12-3/8 /8		-
19	64041	12	BASIC FITTING F40XS10-3/8 /8		-
20	64059	3	BASIC FITTING F40XS10-1/4		-
21	74411	1	HEXAGONAL PLUG HF 3/8" HTUNG		-
22	64700	1	HEXAGONAL PLUG R 1/4"		-
23	74484	2	HEXAGONAL HEAD SCREW M8* 60 DIN 912		-
24	74481	1	HEXAGONAL HEAD SCREW M8*20 DIN 912 ZN		-
25	A429197	2	HEXAGONAL SERRATED SCREW M8*12 W. FLANGE		-
26	74932	2	HEXAGONAL HEAD SCREW M8*12		-
27	A450046	3	HEXAGONAL NUT M8 WITH FLANGE		-
28	73122	3	WASHER M8 A8,4 DIN 125 ZN		-
29	64678	2	BASIC FITTING F40XS6-1/4"		-

© This drawing is the property of Avant Tecno Oy.

© This drawing is the property of Avant Tecno Oy.

A453079 SPLITTER BOX ASSEMBLY

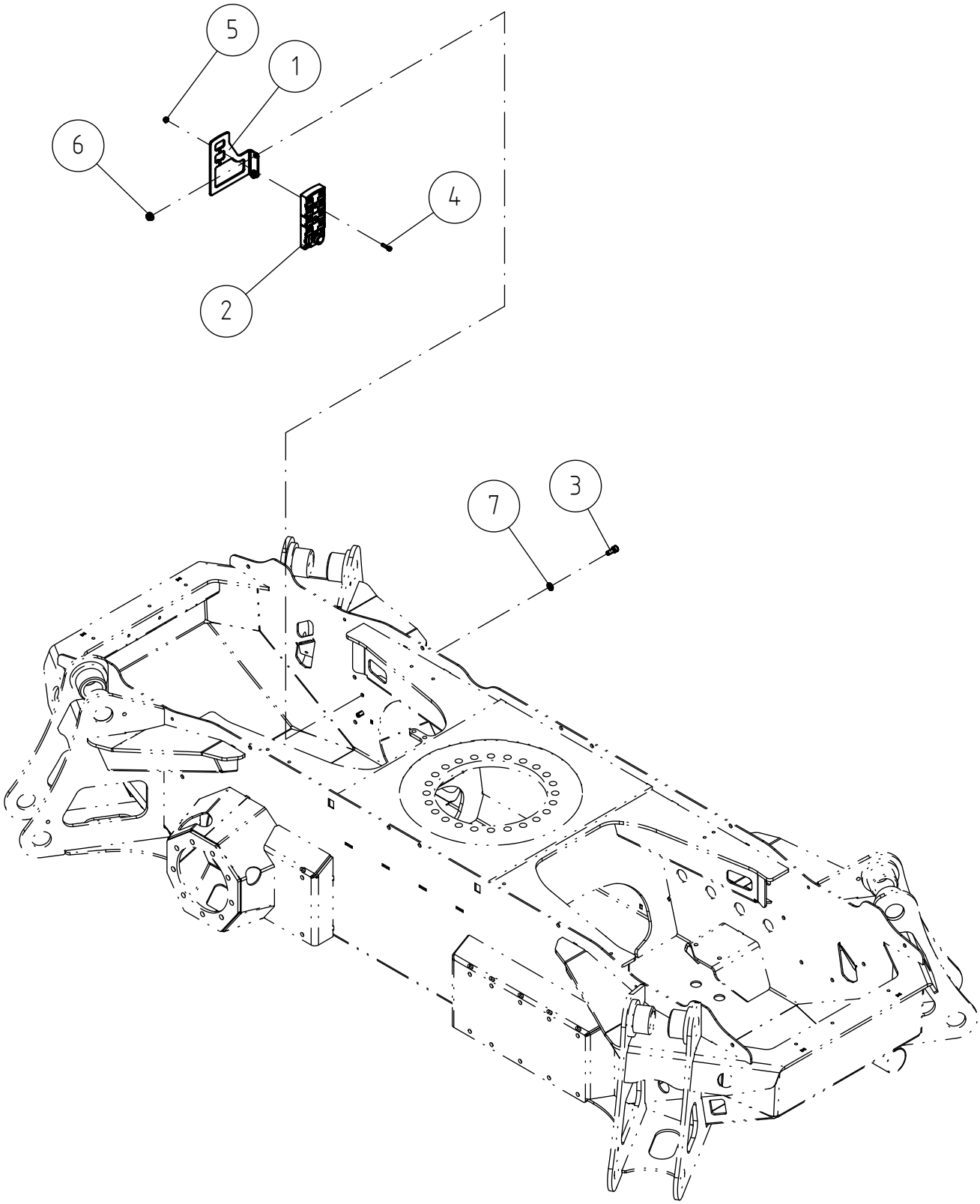

© This drawing is the property of Avant Tecno Oy.

© This drawing is the property of Avant Tecno Oy.

A453079 SPLITTER BOX ASSEMBLY

REF	PART NO	QTY	DESCRIPTION	NOTES	PAGE
1	A450201	1	MOUNTING BRACET SPLITTER BOX		-
2	A453080	1	SPLITTER BOX		-
3	74481	2	HEXAGONAL HEAD SCREW M8*20 DIN 912 ZN		-
4	75094	2	HEXAGONAL HEAD SCREW M5*20 DIN912 2		-
5	A453081	2	HEXAGONAL NUT M5 DIN 6923		-
6	A450046	2	HEXAGONAL NUT M8 WITH FLANGE		-
7	73122	2	WASHER M8 A8,4 DIN 125 ZN		-

© This drawing is the property of Avant Tecno Oy.

© This drawing is the property of Avant Tecno Oy.

A445935 ENGINE ASSEMBLY LEGUAN 220

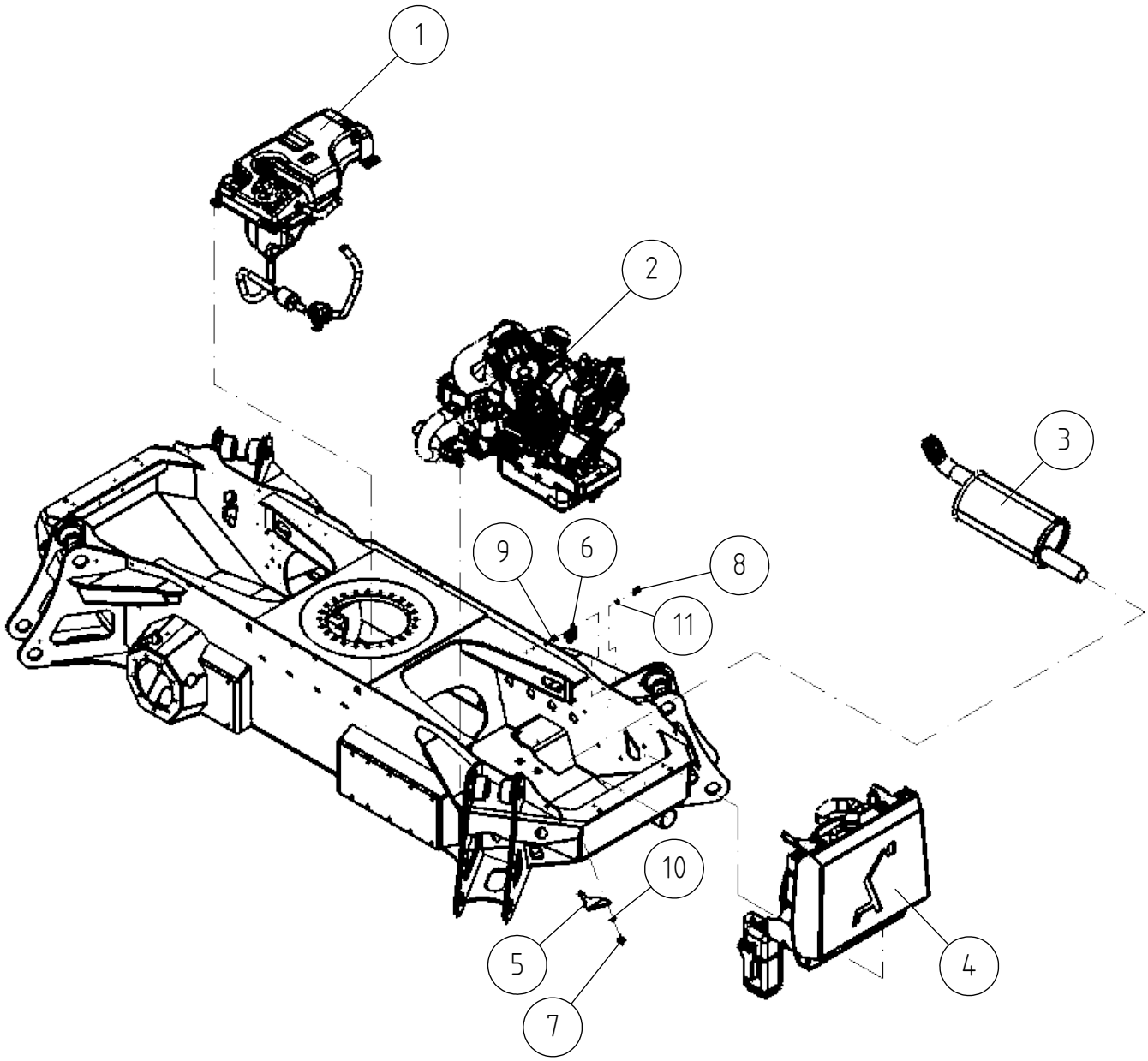

© This drawing is the property of Avant Tecno Oy.

© This drawing is the property of Avant Tecno Oy.

A445935 ENGINE ASSEMBLY LEGUAN 220

REF	PART NO	QTY	DESCRIPTION	NOTES	PAGE
1	A450937	1	FUEL TANK ASSEMBLY LEGUAN 220		56
2	A449403	1	DIESEL ENGINE D902 ASSEMBLY LEGUAN 220		60
3	A449205	1	EXHAUST MUFFLER ASSEMBLY LEGUAN 220		66
4	A447164	1	RADIATOR ASSEMBLY LEGUAN 220		68
5	A449613	1	LID OIL FILLER CAP		-
6	74573	1	PIPE CLAMP F25 MM		-
7	74932	1	HEXAGONAL HEAD SCREW M8*12		-
8	74475	1	HEXAGON. HEAD SCREW M 6* 20 DIN 912 ZN		-
9	A450669	1	NUT M6 NYLOC DIN 6926		-
10	73122	1	WASHER M8 A8,4 DIN 125 ZN		-
11	71680	1	WASHER M6 DIN 125		-

© This drawing is the property of Avant Tecno Oy.

© This drawing is the property of Avant Tecno Oy.

A450937 FUEL TANK ASSEMBLY LEGUAN 220

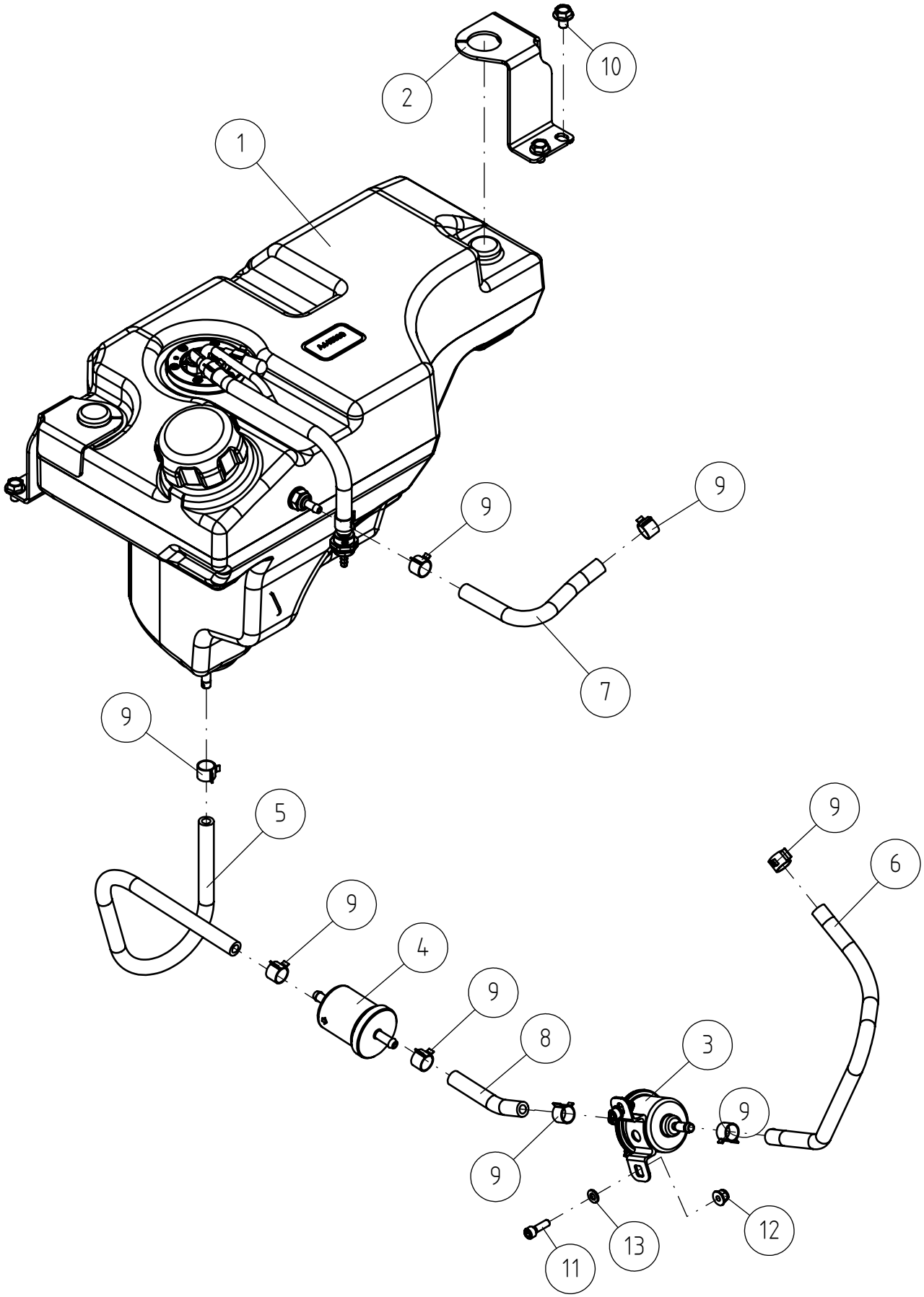

© This drawing is the property of Avant Tecno Oy.

© This drawing is the property of Avant Tecno Oy.

A450937 FUEL TANK ASSEMBLY LEGUAN 220

REF	PART NO	QTY	DESCRIPTION	NOTES	PAGE
1	A447373	1	FUEL TANK ASSEMBLY LEGUAN 220		58
2	A449793	2	BRACKET FUEL TANK LEGUAN 220		-
3	64625	1	FUEL PUMP ELECTR. KUBOTA 68371-51211		-
4	64657	1	FUEL FILTER IN HOSE 12581-43012 D1105		-
5	A453014	1	FUEL HOSE L=510		-
6	A451411	1	FUEL HOSE L=480 LEGUAN		-
7	A449748	1	FUEL HOSE L=170		-
8	A449747	1	FUEL HOSE L=100		-
9	A453015	8	SPRING BAND HOSE CLAMP D13,5 DIN 3021		-
10	A429197	4	HEXAGONAL SERRATED SCREW M8*12 W. FLANGE		-
11	74475	2	HEXAGON. HEAD SCREW M 6* 20 DIN 912 ZN		-
12	A450669	2	NUT M6 NYLOC DIN 6926		-
13	71680	2	WASHER M6 DIN 125		-

© This drawing is the property of Avant Tecno Oy.

© This drawing is the property of Avant Tecno Oy.

A447373 FUEL TANK ASSEMBLY LEGUAN 220

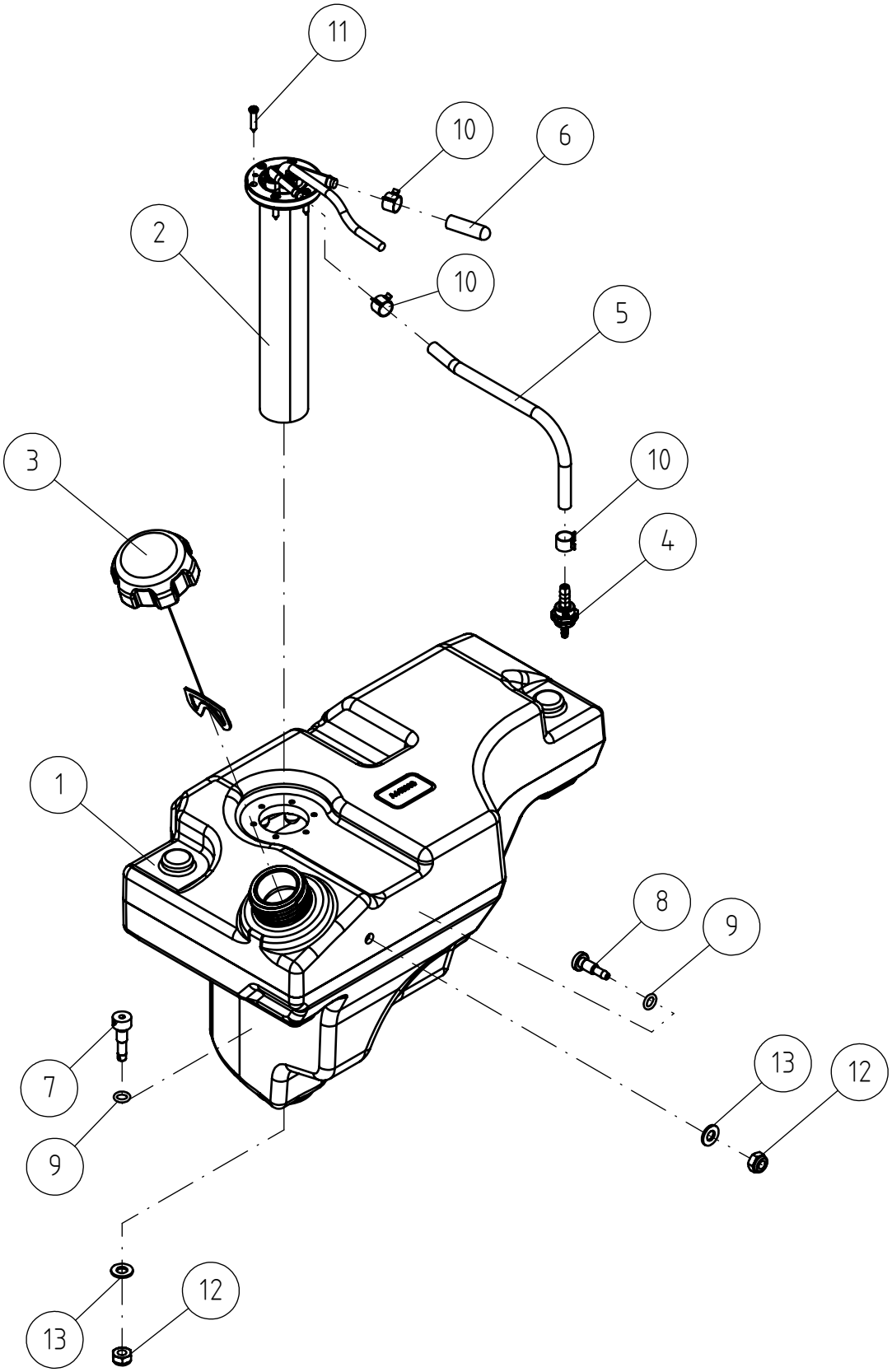

© This drawing is the property of Avant Tecno Oy.

© This drawing is the property of Avant Tecno Oy.

A447373 FUEL TANK ASSEMBLY LEGUAN 220

REF	PART NO	QTY	DESCRIPTION	NOTES	PAGE
1	A445989	1	FUEL TANK 20L LEGUAN		-
2	A447360	1	FUEL LEVEL SENSOR		-
3	66313	1	FUEL TANK CAP		-
4	A422526	1	CHECK VALVE FUEL TANK		-
5	A449421	1	FUEL HOSE L=260		-
6	A452073	1	RUBBER CAP D9,5		-
7	A431880	1	NIPPLE 7,9MM FUEL TANK		-
8	A43531	1	NIPPLE F7MM		-
9	74774	2	O-RING NBR F 10*3		-
10	A453015	3	SPRING BAND HOSE CLAMP D13,5 DIN 3021		-
11	75130	6	THREAD-FORMING SCREW M5*25		-
12	72322	2	HEXAGONAL NUT M 10 NYLOC DIN 985		-
13	73121	2	WASHER M10 A10,5 DIN 125 ZN		-

© This drawing is the property of Avant Tecno Oy.

© This drawing is the property of Avant Tecno Oy.

A449403 DIESEL ENGINE D902 ASSEMBLY LEGUAN 220

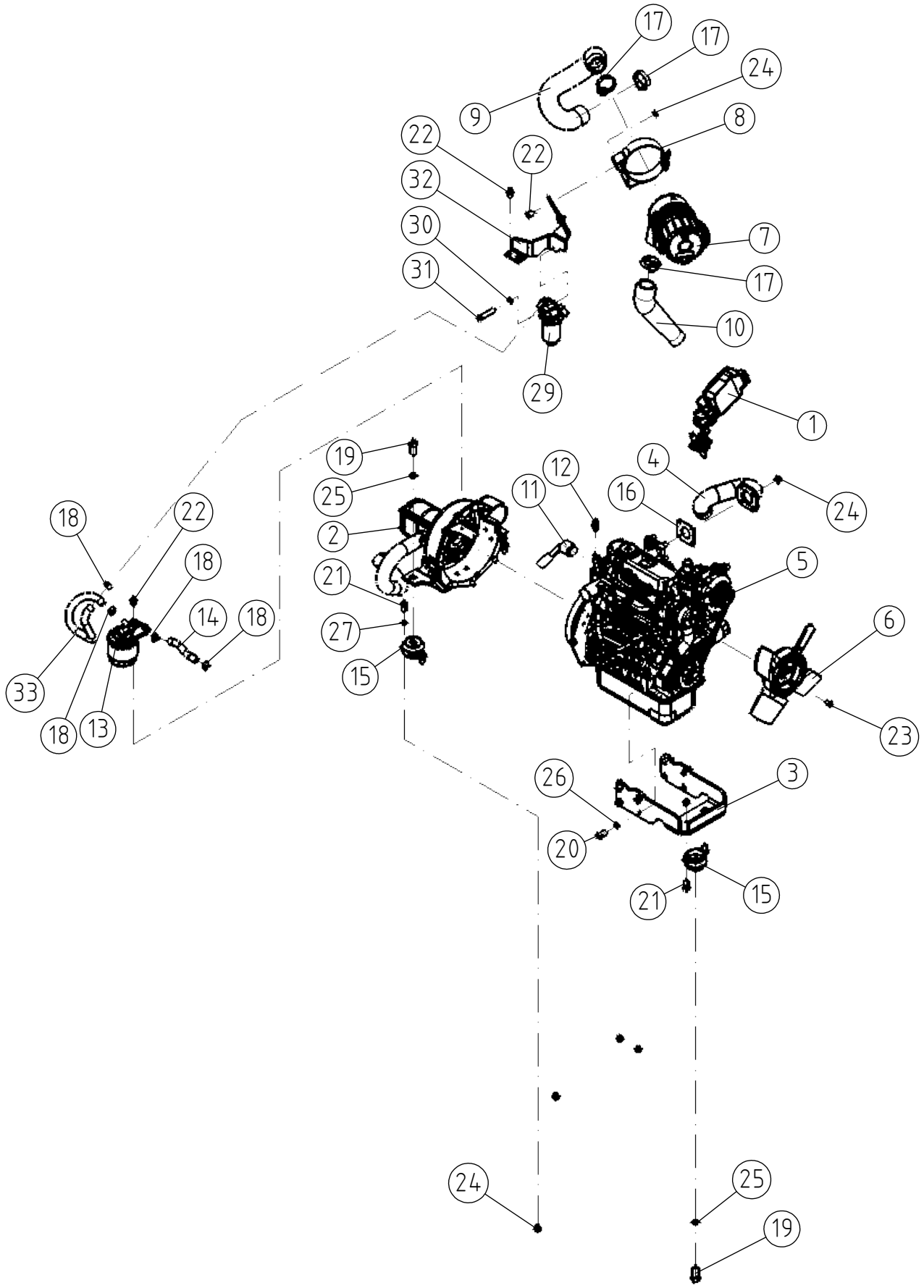

© This drawing is the property of Avant Tecno Oy.

© This drawing is the property of Avant Tecno Oy.

A449403 DIESEL ENGINE D902 ASSEMBLY LEGUAN 220

REF	PART NO	QTY	DESCRIPTION	NOTES	PAGE
1	A449442	1	THROTTLE ACTUATOR ASSEMBLY		62
2	A453017	1	HYDRAULIC PUMP ASSEMBLY LEGUAN 220		64
3	A449432	1	ENGINE BRACKET FRONT		-
4	A447839	1	EXHAUST PIPE		-
5	66511	1	DIESEL ENGINE KUBOTA D902 WITHOUT		-
5.1	64430	1	TRAPEZ. BELT GENERATOR KUBOTA Z482/D722		-
5.2	64207	1	ENGINE OIL FILTER KUBOTA Z482/D722		-
5.3	65522	1	STOP SOLENOID D722 17520-60012		-
5.4	A443823	1	TEMPERATURE SWITCH 82°C KUBOTA D902		-
5.5	A444459	1	TEMPERATURE SWITCH 115° C KUBOTA		-
6	66449	1	FAN F315 4 BLADE		-
7	66469	1	AIR FILTER, COMPLETE, D902, 423/523		-
7.1	66516	1	AIR FILTER CARTRIDGE 423/523 KUBOTA D902		-
8	66468	1	CLAMP, AIR FILTER 66469		-
9	A447248	1	INTAKE HOSE		-
10	A419968	1	SUCTION DAMPER AIR FILTER 420-523		-
11	65727	1	HEATER ELEMENT 300W, ENGINE BLOCK HEATER		-
12	64486	1	SENSOR, TEMP. GAUGE COBO	64486 Install torque 25 Nm	-
13	64868	1	FUEL FILTER, KIT 16613-43001		-
13.1	64626	1	FUEL FILTER CARTRIDGE 15221-4308-0		-
14	A451416	1	FUEL HOSE L=140		-
15	64843	3	ENGINE MOUNT NOVIBRA RAB-3		-
16	64280	1	SEAL, EXHAUST PIPE, KUBOTA Z482/D722		-
17	64338	3	HOSE CLAMP ABA 44-56 MM		-
18	A453015	4	SPRING BAND HOSE CLAMP D13,5 DIN 3021		-
19	74876	3	HEXAGONAL HEAD SCREW M12*35 DIN912		-
20	A433247	8	HEXAGONAL HEAD SCREW M10*1,25*20 DIN 961		-
21	71884	6	HEXAGONAL HEAD SCREW M 8*25 DIN 912 2		-
22	A429200	6	HEXAGONAL SERRATED SCREW M8*16 WITH FLAN		-
23	A431967	4	HEXAGONAL SERRATED SCREW M6*16 W. FLANG		-
24	A450046	12	HEXAGONAL NUT M8 WITH FLANGE		-
25	74532	3	WASHER NORDLOCK NL12		-
26	74531	8	SPACER NORDLOCK M10, PAIR		-
27	63944	6	WASHER, PAIR, NORD-LOCK M8		-
28	A454841	4	MOTOR OIL 10W-30		-
29	64920	1	WATER SEQUESTER, KIT, KUBOTA 16614-43001		-
30	73122	1	WASHER M8 A8,4 DIN 125 ZN		-
31	74484	1	HEXAGONAL HEAD SCREW M8* 60 DIN 912		-
32	A453774	1	MOUNTING BRACKET WATER SEQUESTER		-
33	A457163	1	FUEL HOSE L=600		-

© This drawing is the property of Avant Tecno Oy.

© This drawing is the property of Avant Tecno Oy.

A449442 THROTTLE ACTUATOR ASSEMBLY

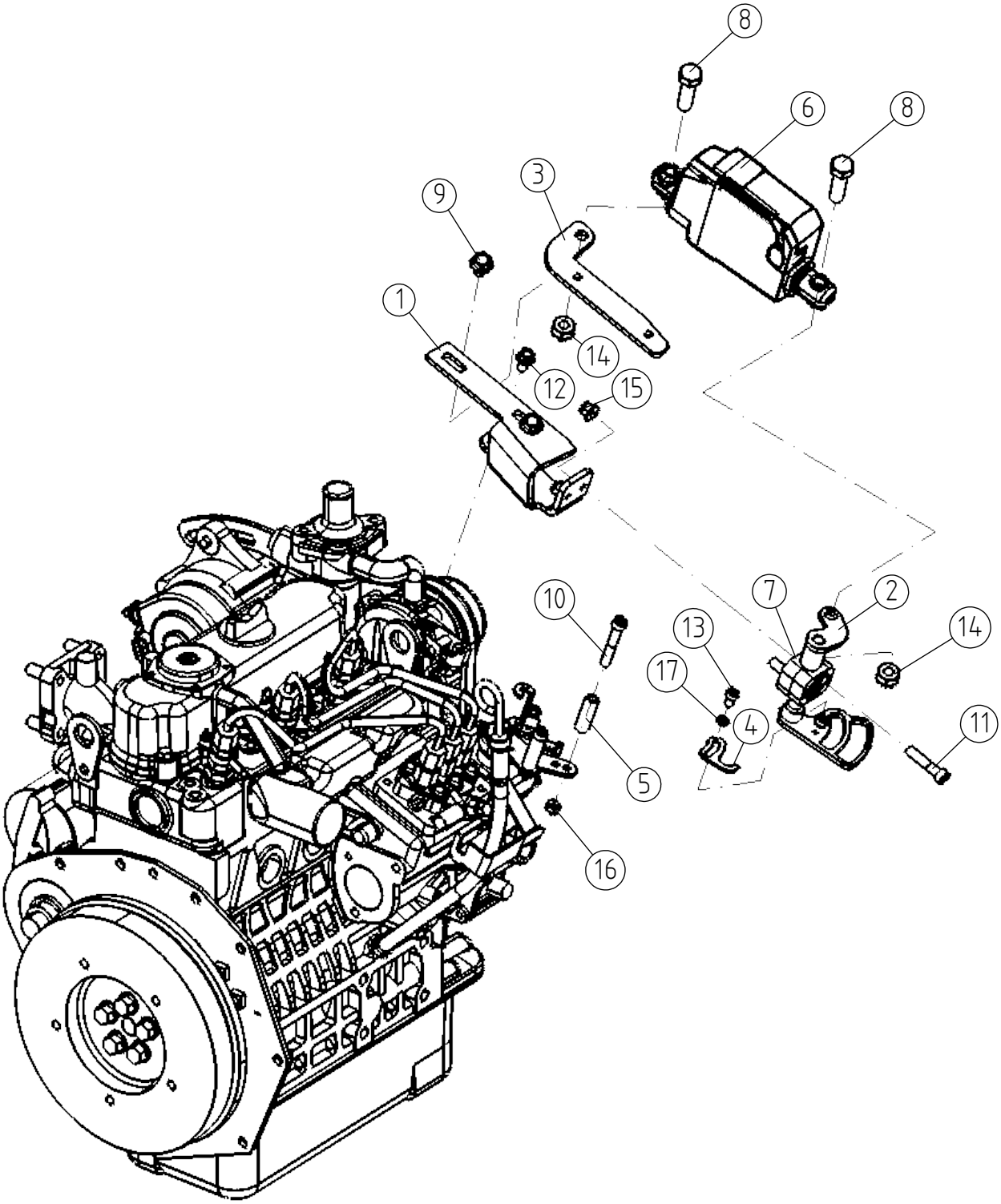

© This drawing is the property of Avant Tecno Oy.

© This drawing is the property of Avant Tecno Oy.

A449442 THROTTLE ACTUATOR ASSEMBLY

REF	PART NO	QTY	DESCRIPTION	NOTES	PAGE
1	A449208	1	BRACKET ELECTRIC ACTUATOR THROTTLE		-
2	A422396	1	THROTTLE LEVER, L190 KUBOTA Z482		-
3	A449398	1	ADJUSTEMENT PLATE, THROTTLE ACTUATOR		-
4	A422786	1	ADJUSTMENT PLATE, THROTTLE LEVER L190		-
5	A422383	2	BUSHING, THROTTLE LEVER, L190		-
6	A435512	1	ELECTRIC ACTUATOR 12V LINAK 900N 40 MM		-
7	A453019	1	PIPE CLAMP		-
8	74506	2	HEXAGONAL SCREW M10*40 DIN 933 ZN		-
9	A429197	2	HEXAGONAL SERRATED SCREW M8*12 W. FLANGE		-
10	74477	2	HEXAGONAL HEAD SCREW M6*45 DIN 912 ZN		-
11	A427068	2	HEXAGONAL HEAD SCREW M6*35 DIN 912 2		-
12	A431968	2	HEXAGONAL SERRATED SCREW M6*12 W. FLANG		-
13	74471	2	HEXAG. HEAD SCREW M 5* 10 DIN 912 ZN		-
14	72322	2	HEXAGONAL NUT M 10 NYLOC DIN 985		-
15	A450669	2	NUT M6 NYLOC DIN 6926		-
16	72318	2	HEXAGONAL NUT M 6 DIN 985 NYLOC		-
17	74448	2	WASHER M5 A5,3 DIN 125 ZN		-

© This drawing is the property of Avant Tecno Oy.

© This drawing is the property of Avant Tecno Oy.

A453017 HYDRAULIC PUMP ASSEMBLY LEGUAN 220

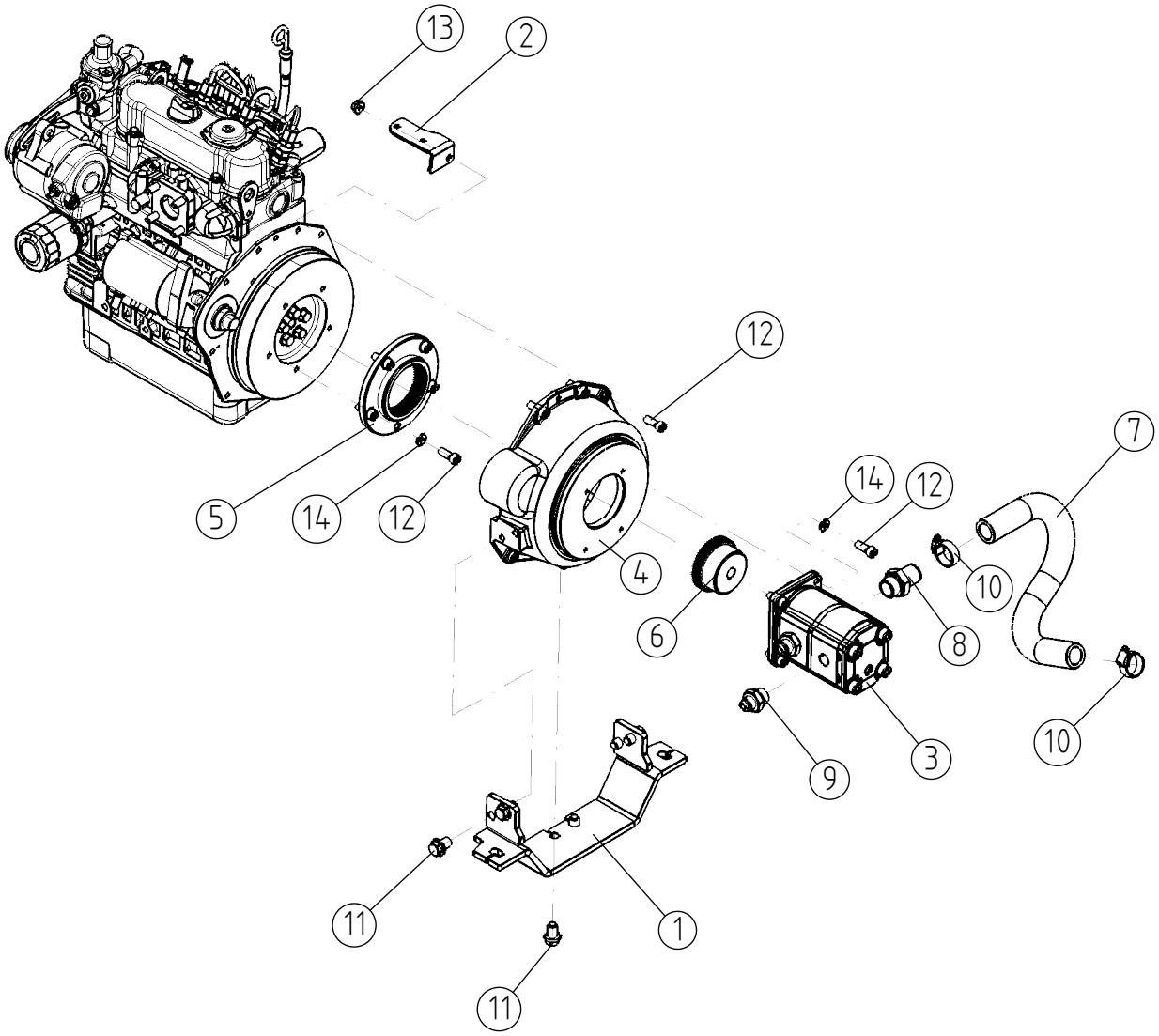

© This drawing is the property of Avant Tecno Oy.

© This drawing is the property of Avant Tecno Oy.

A453017 HYDRAULIC PUMP ASSEMBLY LEGUAN 220

REF	PART NO	QTY	DESCRIPTION	NOTES	PAGE
1	A43522	1	ENGINE MOUNTING BRACKET, REAR		-
2	A449653	1	MOUNTING BRACKET FUEL FILTER LEGUAN		-
3	A446525	1	HYDRAULIC PUMP 8+5 CCM		-
4	64374	1	FLYWHEEL HOUSING KUBOTA RECT.F80 72*100		-
5	64376	1	COUPLING BOWEX 48FLE- , ENGINE SIDE		-
6	64378	1	COUPLING HALF 48FLE 1:5, PUMP SIDE		-
7	A449409	1	HYDR. HOSE L=470		-
8	66107	1	HOSE BARB R3/4"UK - 25 MM L=58		-
9	64058	2	BASIC FITTING F40XS12-1/2		-
10	A438215	2	HOSE CLAMP 26-38 MM		-
11	A436874	6	HEXAGONAL SCREW M12*20 2		-
12	71884	16	HEXAGONAL HEAD SCREW M 8*25 DIN 912 2		-
13	A450046	1	HEXAGONAL NUT M8 WITH FLANGE		-
14	73122	9	WASHER M8 A8,4 DIN 125 ZN		-

© This drawing is the property of Avant Tecno Oy.

© This drawing is the property of Avant Tecno Oy.

A449205 EXHAUST MUFFLER ASSEMBLY LEGUAN 220

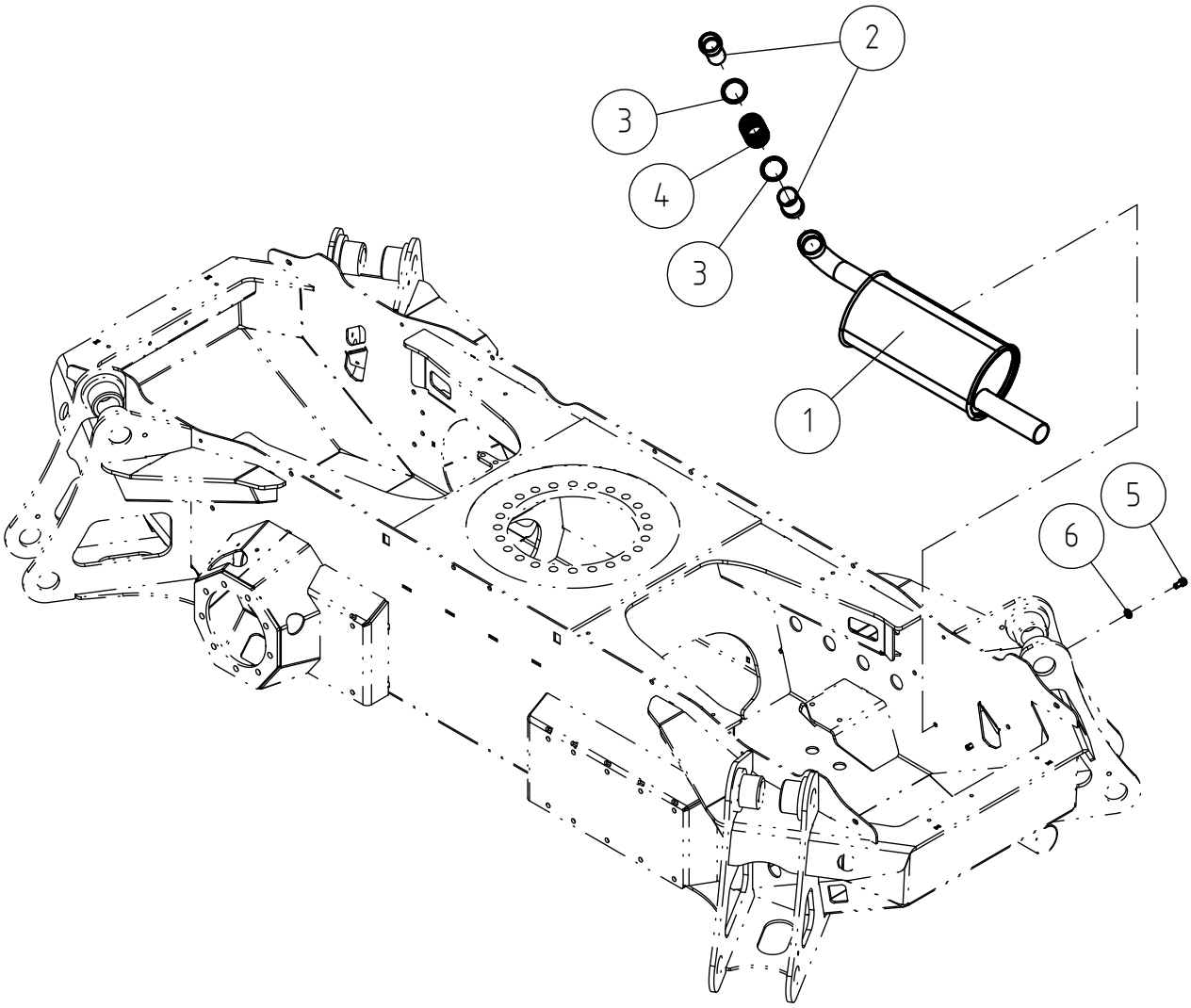

© This drawing is the property of Avant Tecno Oy.

© This drawing is the property of Avant Tecno Oy.

A449205 EXHAUST MUFFLER ASSEMBLY LEGUAN 220

REF	PART NO	QTY	DESCRIPTION	NOTES	PAGE
1	A447007	1	EXHAUST MUFFLER LEGUAN 220 KUBOTA D902		-
2	A444632	1	BUSHINGS EXHAUST PIPE 200 SERIES		-
3	A46002	2	RING		-
4	A46005	1	SPRING 3*41*140 NT 8,5		-
5	74480	2	HEXAGON. HEAD SCREW M 8* 16 DIN 912 ZN		-
6	73122	2	WASHER M8 A8,4 DIN 125 ZN		-

© This drawing is the property of Avant Tecno Oy.

© This drawing is the property of Avant Tecno Oy.

A447164 RADIATOR ASSEMBLY LEGUAN 220

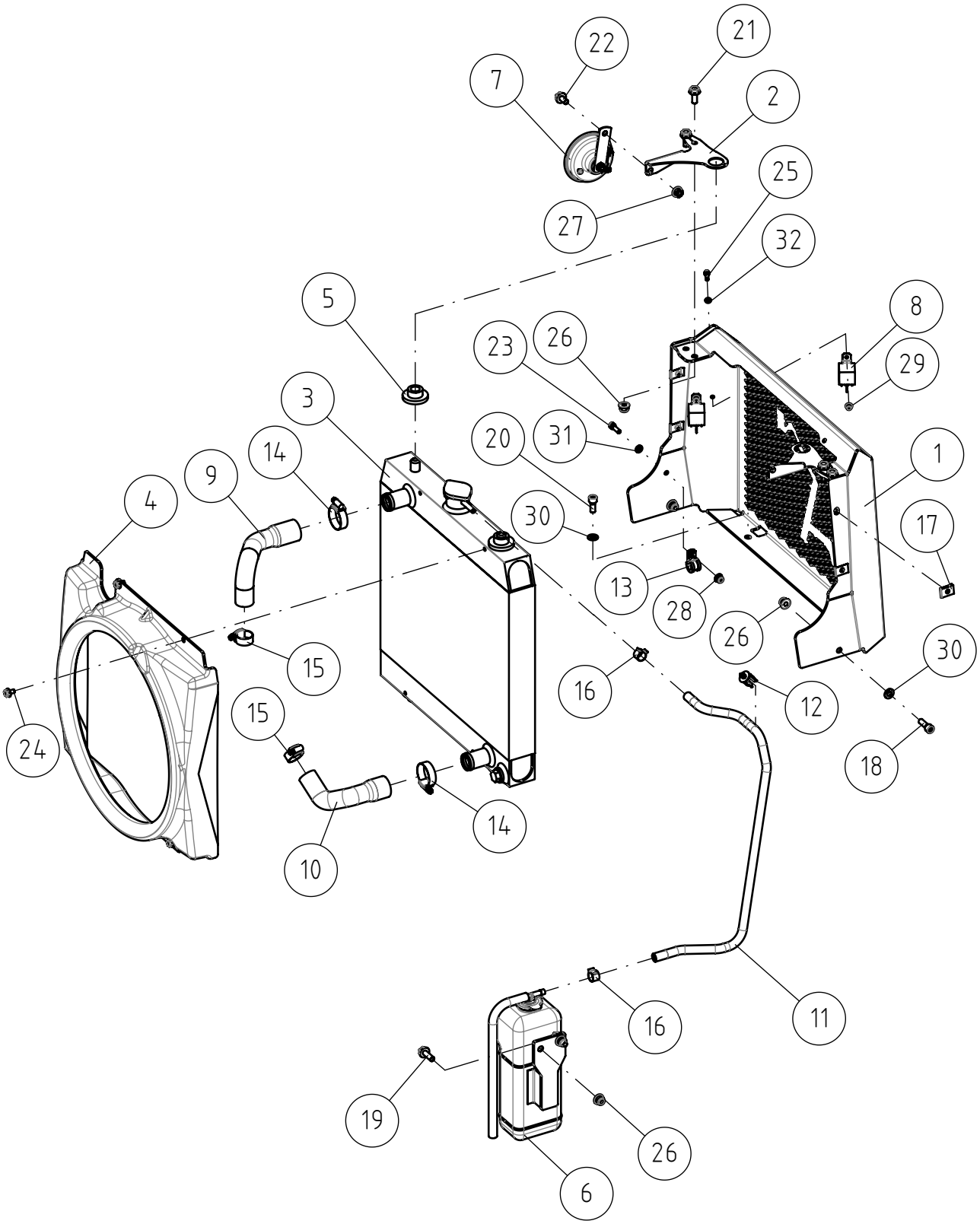

© This drawing is the property of Avant Tecno Oy.

© This drawing is the property of Avant Tecno Oy.

A447164 RADIATOR ASSEMBLY LEGUAN 220

REF	PART NO	QTY	DESCRIPTION	NOTES	PAGE
1	A450681	1	FRONT MASK		-
2	A452994	2	MOUNTING BRACKET, RADIATOR		-
3	A422612	1	RADIATOR D902		-
3.1	A436407	1	CAP, RADIATOR 0.9BAR		-
4	A442893	1	WIND TUNNEL 423/523		-
5	A420381	4	VIBRATION DAMPER RUBBER RADIATOR		-
6	65067	1	OVERFLOW TANK 1,30 L RADIATOR KUBOTA		-
7	64157	1	SIGNAL HORN COMPLETE		-
8	65521	2	RELAY 12V 70A		-
9	A415802	1	RADIATOR HOSE UPPER		-
10	A415803	1	RADIATOR HOSE LOWER		-
11	A451414	1	OVERFLOW HOSE RADIATOR L=690		-
12	A428260	1	PIPE CLIP D13-D14		-
13	74570	1	PIPE CLAMP F11 MM		-
14	73809	2	HOSE CLAMP 32-44 MM		-
15	73530	2	HOSE CLAMP 22-32 MM		-
16	A453015	2	SPRING BAND HOSE CLAMP D13,5 DIN 3021		-
17	74807	4	SPEED NUT M6, FOR 0.5-4.0 MM PLATE		-
18	71884	2	HEXAGONAL HEAD SCREW M 8*25 DIN 912 2		-
19	A429202	2	HEXAGONAL SERRATED SCREW M8*25 WITH FLAN		-
20	74481	2	HEXAGONAL HEAD SCREW M8*20 DIN 912 ZN		-
21	A429201	4	HEXAGONAL SERRATED SCREW M8*20 WITH FLAN		-
22	A429200	1	HEXAGONAL SERRATED SCREW M8*16 WITH FLAN		-
23	74475	1	HEXAGON. HEAD SCREW M 6* 20 DIN 912 ZN		-
24	A431969	4	HEXAGONAL SERRATED SCREW M6*10 W. FLANG		-
25	74472	2	HEXAGONAL HEAD SCREW M 5*16 DIN 912 ZN		-
26	A447717	8	HEXAGONAL NUT M8 NYLOC DIN 6926		-
27	A450046	1	HEXAGONAL NUT M8 WITH FLANGE		-
28	A450669	1	NUT M6 NYLOC DIN 6926		-
29	A447716	2	HEXAGONAL NUT M5 NYLOC DIN 6926		-
30	73122	4	WASHER M8 A8,4 DIN 125 ZN		-
31	71680	1	WASHER M6 DIN 125		-
32	74448	2	WASHER M5 A5,3 DIN 125 ZN		-
33	74008	5	COOLANT GLYCOL SHELL		-

© This drawing is the property of Avant Tecno Oy.

© This drawing is the property of Avant Tecno Oy.

A450202 STARTER BATTERY 12V ASSEMBLY LEGUAN 220

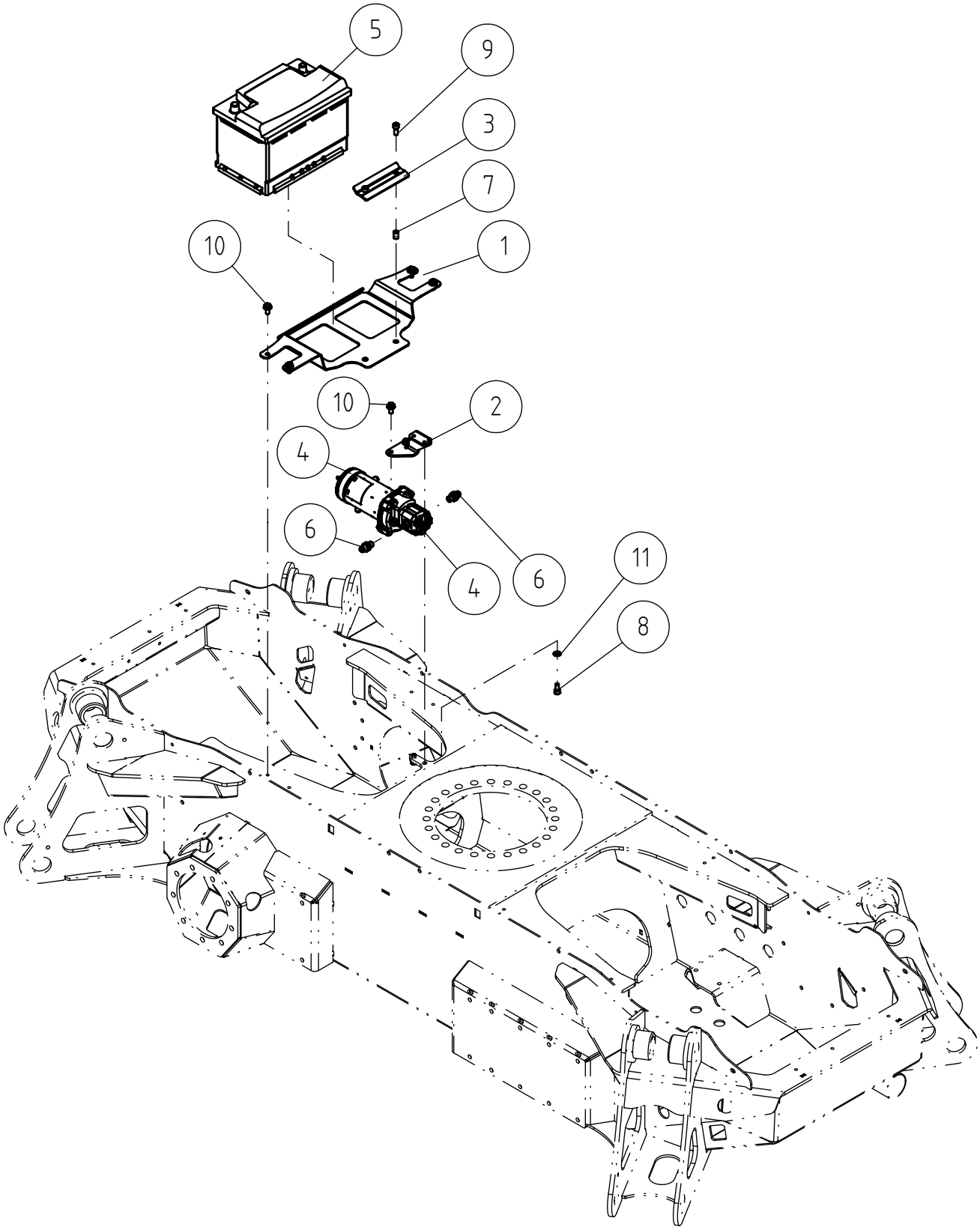

© This drawing is the property of Avant Tecno Oy.

© This drawing is the property of Avant Tecno Oy.

A450202 STARTER BATTERY 12V ASSEMBLY LEGUAN 220

REF	PART NO	QTY	DESCRIPTION	NOTES	PAGE
1	A449455	1	MOUNTING PLATE BATTERY 12V LEGUAN 220		-
2	A453119	1	BRACKET EMERGENCY OPERATION PUMP		-
3	A47372	1	BRACKET, BATTERY 12V		-
4	A446467	1	HYDRAULIC POWER UNIT 12VDC		-
5	A438875	1	BATTERY 12V 77AH, 760A		-
6	64059	2	BASIC FITTING F40XS10-1/4		-
7	A424985	2	RIVET NUT M8		-
8	74480	2	HEXAGON. HEAD SCREW M 8* 16 DIN 912 ZN		-
9	74481	2	HEXAGONAL HEAD SCREW M8*20 DIN 912 ZN		-
10	A429200	6	HEXAGONAL SERRATED SCREW M8*16 WITH FLAN		-
11	73122	2	WASHER M8 A8,4 DIN 125 ZN		-

© This drawing is the property of Avant Tecno Oy.

© This drawing is the property of Avant Tecno Oy.

A446475 BATTERY DISCONNECT SWITCH ASSEMBLY

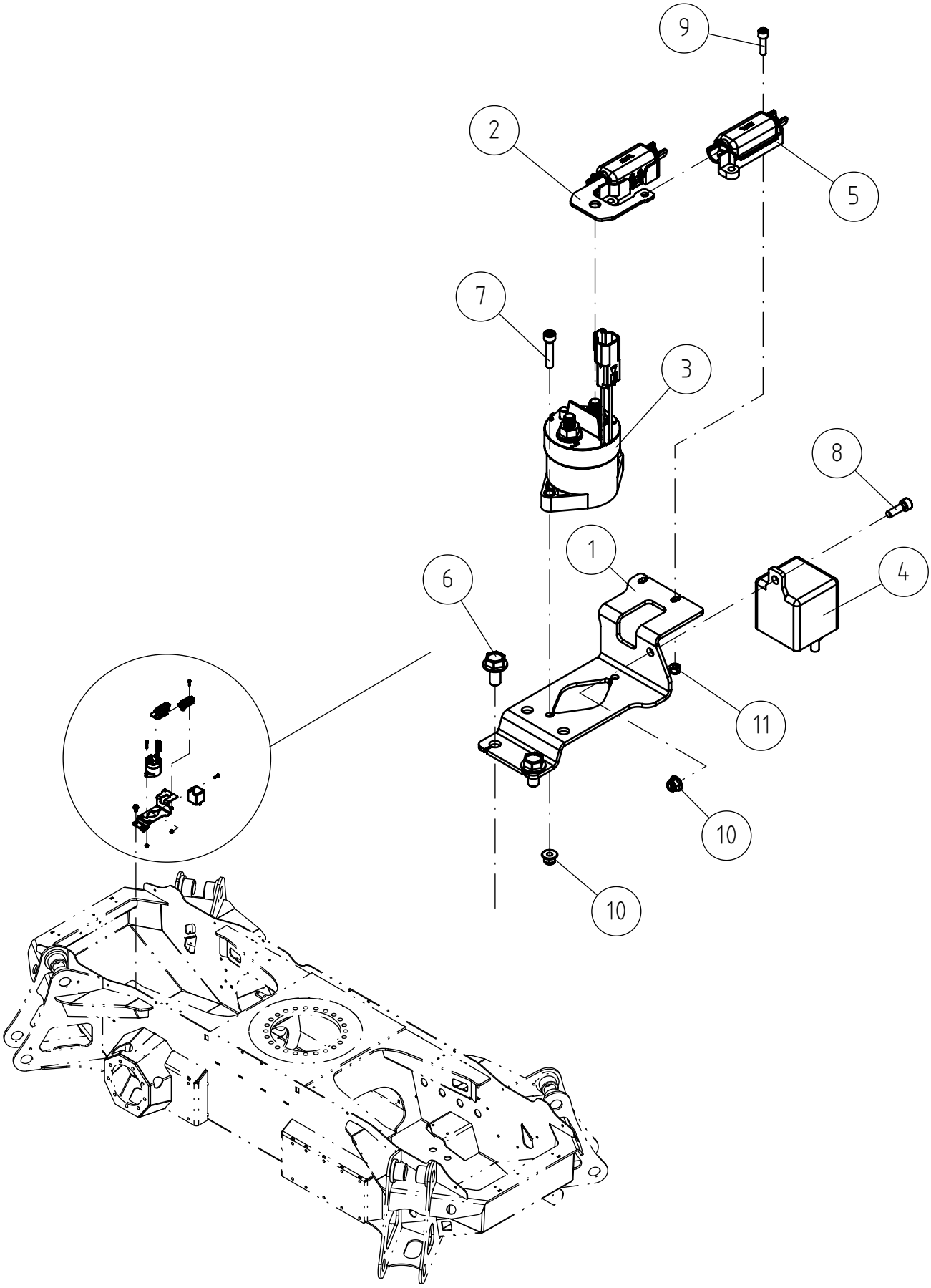

© This drawing is the property of Avant Tecno Oy.

© This drawing is the property of Avant Tecno Oy.

A446475 BATTERY DISCONNECT SWITCH ASSEMBLY

REF	PART NO	QTY	DESCRIPTION	NOTES	PAGE
1	A452657	1	MOUNTING BRACKET, MAIN SWITCH		-
2	A452658	1	DISTRIBUTION PLATE		-
3	A423509	1	BATTERY DISCONNECT RELAY AUTOMATIC L190		-
4	A446091	1	RELAY 12V 100A		-
5	A442417	2	FUSE MODULE FOR MIDI FUSE		-
6	A429200	2	HEXAGONAL SERRATED SCREW M8*16 WITH FLAN		-
7	75095	2	HEXAGONAL HEAD SCREW M5*25 DIN912 2		-
8	74472	1	HEXAGONAL HEAD SCREW M 5*16 DIN 912 ZN		-
9	74469	2	HEXAGONAL HEAD SCREW M4*16 DIN 912 ZN		-
10	A447716	3	HEXAGONAL NUT M5 NYLOC DIN 6926		-
11	72313	2	HEXAGONAL NUT M4 DIN 985 NYLOC		-

© This drawing is the property of Avant Tecno Oy.

© This drawing is the property of Avant Tecno Oy.

A446034 SLEWING RING ASSEMBLY LEGUAN 220

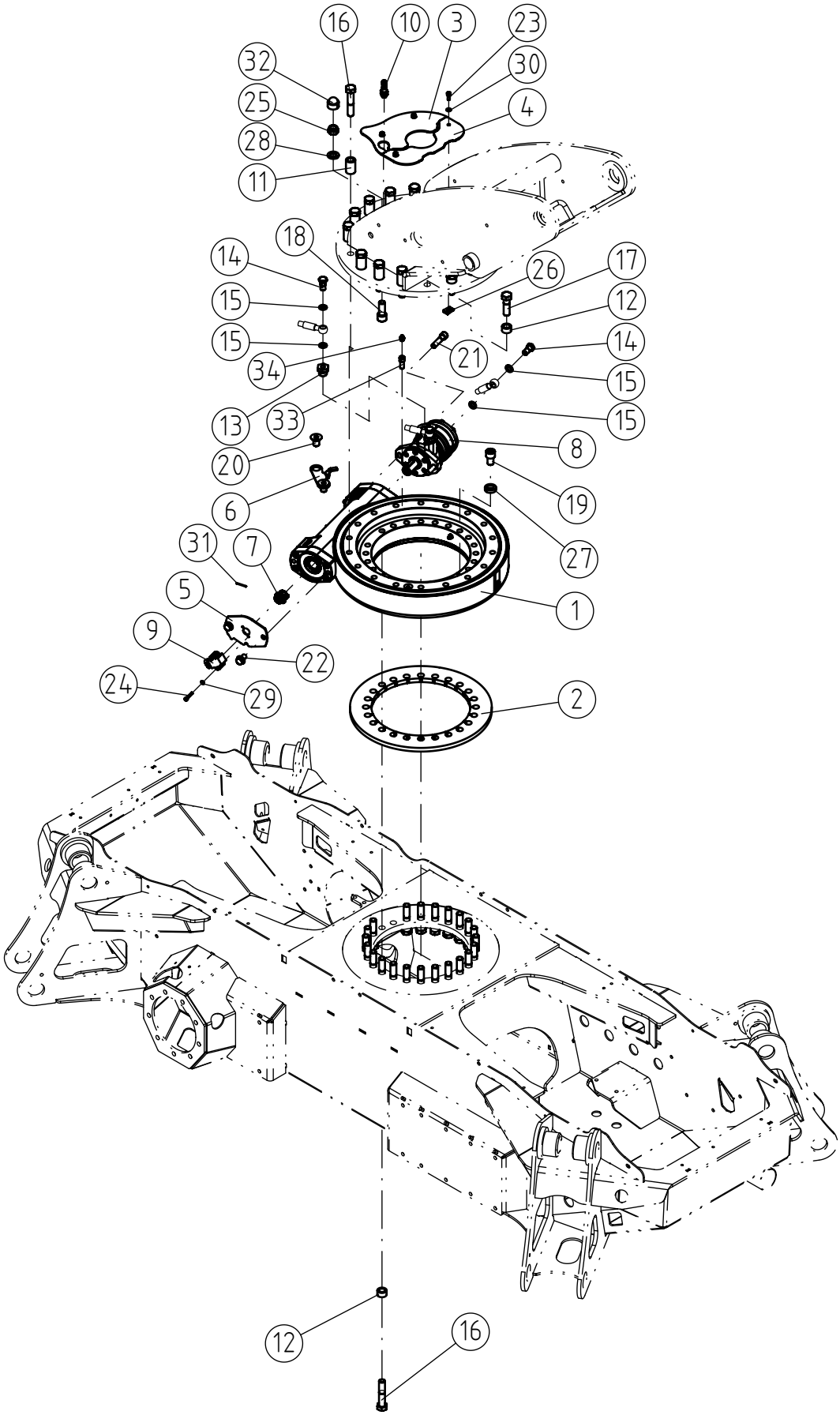

© This drawing is the property of Avant Tecno Oy.

© This drawing is the property of Avant Tecno Oy.

A446034 SLEWING RING ASSEMBLY LEGUAN 220

REF	PART NO	QTY	DESCRIPTION	NOTES	PAGE
1	A435297	1	SLEWING RING		-
2	A428275	1	PLATE, SLEWING RING, PEDESTAL L135NEO		-
3	A447640	1	LID, PEDESTAL		-
4	A447641	1	LID, PEDESTAL		-
5	A438679	1	PLATE, SLEWING SENSOR		-
6	A453890	1	SENSOR PLATE, SLEW RING		-
7	A438955	1	ADAPETER, ANGLE SENSOR		-
8	A446161	1	HYDRAULIC MOTOR		-
9	A446862	1	ANGLE SENSOR		-
10	66338	1	INDUCTIVE PROXIMITY SENSOR 9-36V/0,2A		-
11	A412060	13	STRETCH SLEEVE D16 L=38		-
12	A450799	28	STRETCH SLEEVE D16 L=14		-
13	64743	2	REDUCER FITTING R1/2" - EDX 1/4"		-
14	64557	3	BANJO BOLT R 1/4"		-
15	73757	6	USIT COMPRESSION R1/4"		-
16	A451129	36	HEXAGONAL SCREW M16*80 ZFSHL 10.9		-
17	A450805	5	HEXAGONAL SCREW M16*55 ZFHSL 10.9		-
18	A454180	1	HEXAGONAL HEAD SCREW M16*40 BLACK		-
19	A453951	1	HEXAGONAL HEAD SCREW M16*25 12.9		-
20	A454155	2	COUNTERSUNK SCREW M16*25		-
21	75047	2	HEXAGONAL HEAD SCREW M12*50 10.9 2		-
22	A436874	2	HEXAGONAL SCREW M12*20 2		-
23	73766	4	HEXAGONAL HEAD SCREW M6*16 DIN 912 2 8.8		-
24	74694	2	HEXAGONAL SCREW M5*30 DIN 912		-
25	72330	1	HEXAGONAL NUT M16 NYLOC DIN 985		-
26	74807	4	SPEED NUT M6, FOR 0.5-4.0 MM PLATE		-
27	A454156	1	WASHER THICK M16		-
28	A430193	1	WASHER M16 A17 DIN 125		-
29	74448	2	WASHER M5 A5,3 DIN 125 ZN		-
30	71680	4	WASHER M6 DIN 125		-
31	A457291	1	SPRING -TYPE PIN 2*30		-
32	A454179	1	CAP, HEXAGONAL SCREW M16		-
33	A456103	1	RAISER, GREASE NIPPLE		-
34	72798	1	GREASE NIPPLE R 1/8" STRAIGHT		-

© This drawing is the property of Avant Tecno Oy.

© This drawing is the property of Avant Tecno Oy.

A445988 COVER PANELS CHASSIS LEGUAN 220

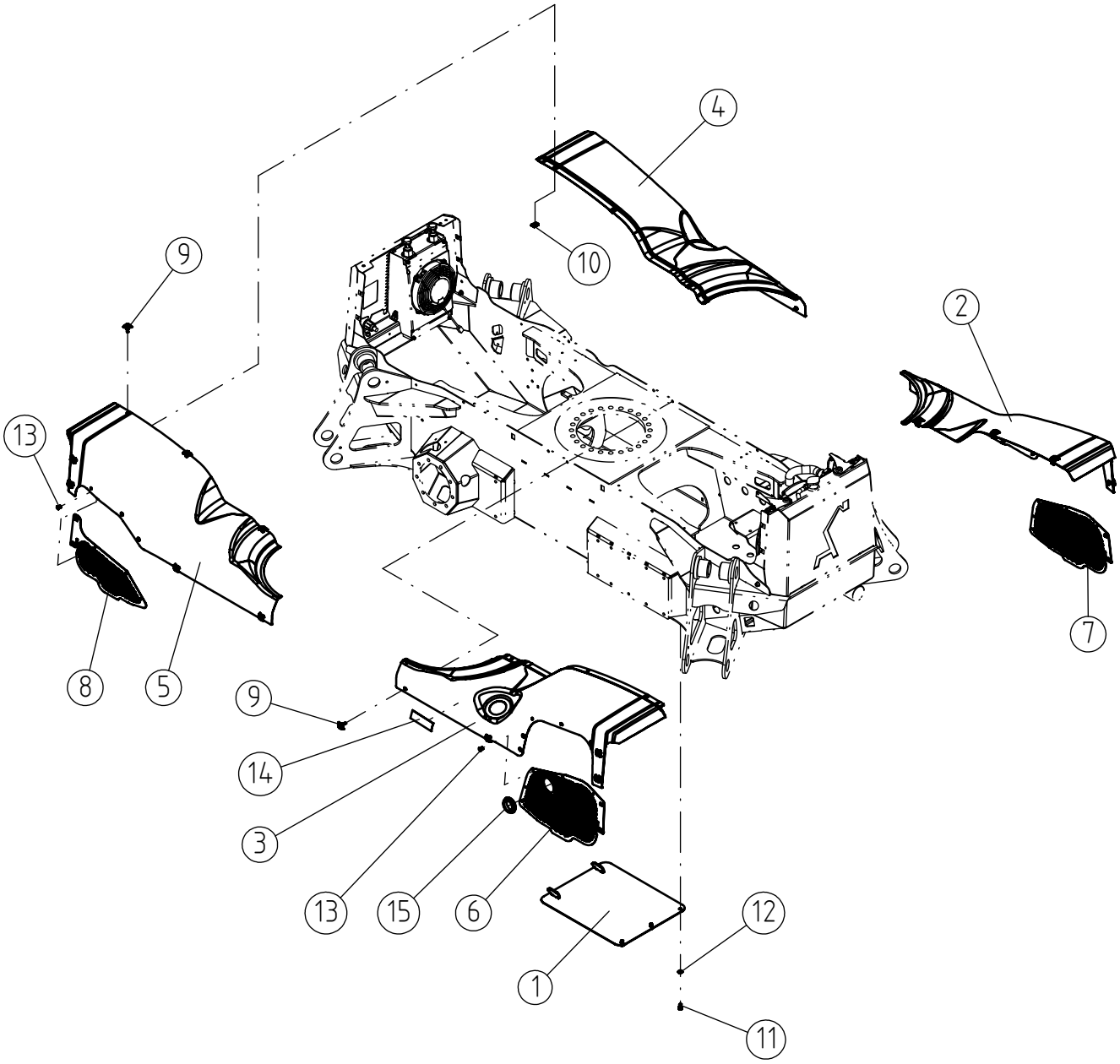

© This drawing is the property of Avant Tecno Oy.

© This drawing is the property of Avant Tecno Oy.

A445988 COVER PANELS CHASSIS LEGUAN 220

REF	PART NO	QTY	DESCRIPTION	NOTES	PAGE
1	A420914	1	BOTTOM PLATE, CHASSIS, LEGUAN 160M2		-
2	A446160	1	COVER PANEL FRONT LEFT LEGUAN 220		-
3	A446159	1	COVER PANEL FRONT RIGHT LEGUAN 220		-
4	A446157	1	COVER PANEL REAR LEFT LEGUAN 220		-
5	A446158	1	COVER PANEL REAR RIGHT LEGUAN 220		-
6	A450383	1	NET, SIDE FRONT		-
7	A453831	1	NET, SIDE FRONT		-
8	A454154	2	NET, SIDE REAR		-
9	66126	22	STAR GRIP SCREW M6*15 F32-20,5		-
10	74807	6	SPEED NUT M6, FOR 0.5-4.0 MM PLATE		-
11	74932	3	HEXAGONAL HEAD SCREW M8*12		-
12	73122	3	WASHER M8 A8,4 DIN 125 ZN		-
13	A454169	16	BARBED FASTENER D12,7/D6 NYLON		-
14	A43594	1	DECAL "DIESEL" 32*115 BLACK-WHITE/CLEAR		-
15	A456036	1	GROMMET F60/F52/F41		-

© This drawing is the property of Avant Tecno Oy.

© This drawing is the property of Avant Tecno Oy.

A444101 BOOMS ASSEMBLY LEGUAN 220

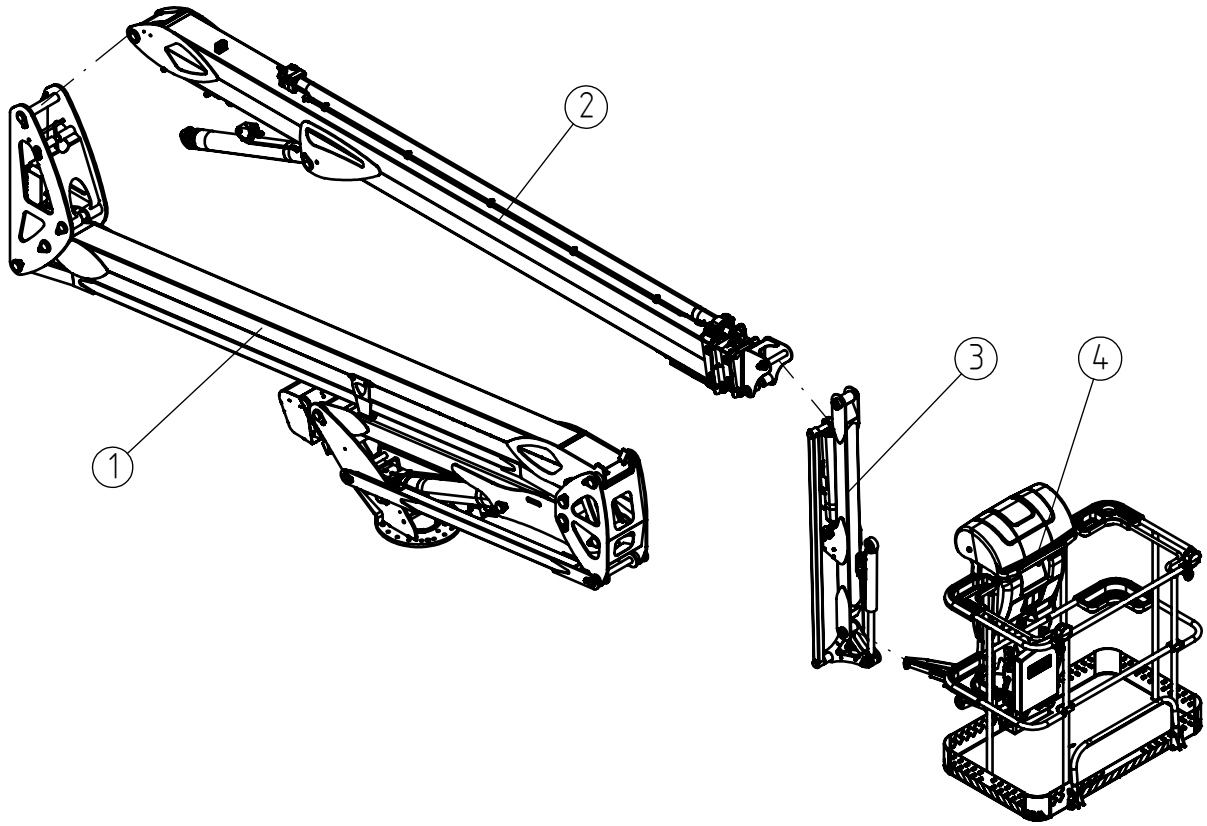

© This drawing is the property of Avant Tecno Oy.

© This drawing is the property of Avant Tecno Oy.

A444101 BOOMS ASSEMBLY LEGUAN 220

REF	PART NO	QTY	DESCRIPTION	NOTES	PAGE
1	A444564	1	LOWER BOOMS ASSEMBLY LEGUAN 220		80
2	A444563	1	UPPER BOOM ASSEMBLY LEGUAN 220		106
3	A444533	1	JIB BOOM ASSEMBLY LEGUAN 220		122
4	A444544	1	PLATFORM+SELF LEVELLING PIECE ASSEMBLY		128

© This drawing is the property of Avant Tecno Oy.

© This drawing is the property of Avant Tecno Oy.

A444564 LOWER BOOMS ASSEMBLY LEGUAN 220

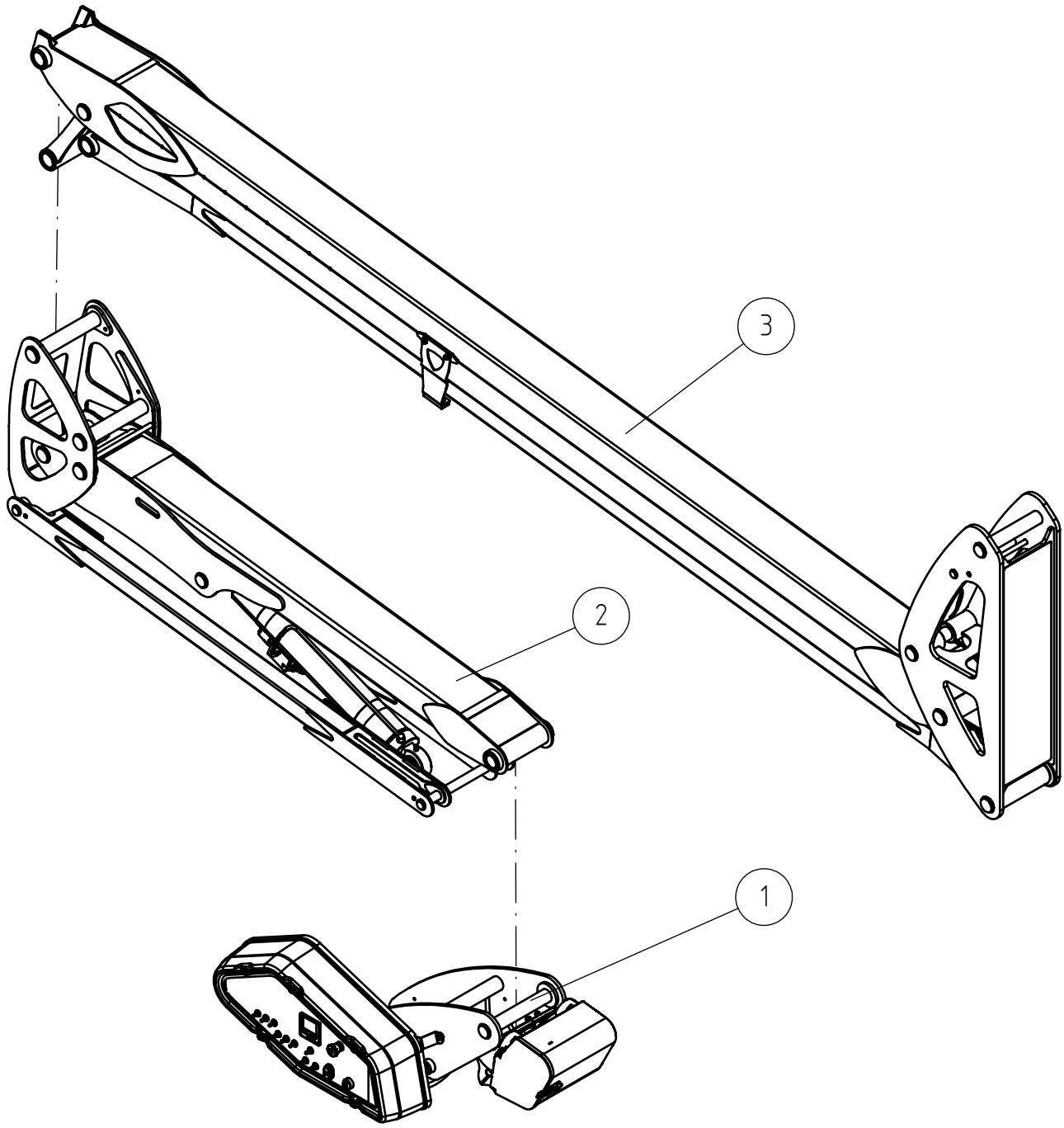

© This drawing is the property of Avant Tecno Oy.

© This drawing is the property of Avant Tecno Oy.

A444564 LOWER BOOMS ASSEMBLY LEGUAN 220

REF	PART NO	QTY	DESCRIPTION	NOTES	PAGE
1	A446071	1	PEDESTAL ASSEMBLY LEGUAN 220		82
2	A446083	1	LOWER BOOM 1 ASSEMBLY LEGUAN 220		98
3	A446058	1	LOWER BOOM 2 ASSEMBLY LEGUAN 220		102

© This drawing is the property of Avant Tecno Oy.

© This drawing is the property of Avant Tecno Oy.

A446071 PEDESTAL ASSEMBLY LEGUAN 220

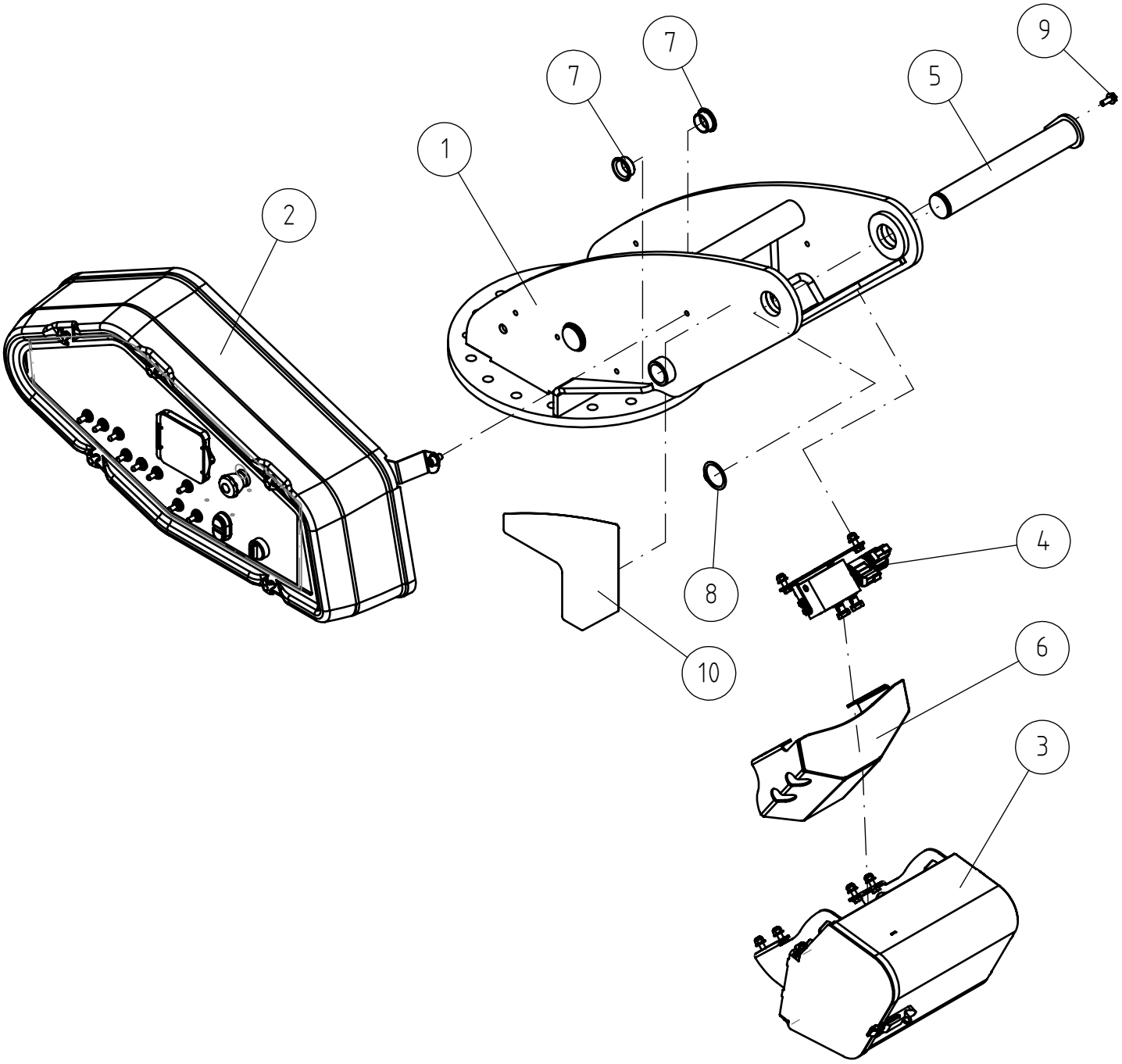

© This drawing is the property of Avant Tecno Oy.

© This drawing is the property of Avant Tecno Oy.

A446071 PEDESTAL ASSEMBLY LEGUAN 220

REF	PART NO	QTY	DESCRIPTION	NOTES	PAGE
1	A446072	1	PEDESTAL LEGUAN 220		-
2	A455168	1	CONTROL BOX ASSEMBLY, CHASSIS		84
3	A446028	1	HOUSING WITH EQUIPMENT REMOTE CONTROL		94
4	A446450	1	HYDRAULIC MANIFOLD, LOWER BOOM		96
5	A447905	2	PIVOT PIN F=45 L=303		-
6	A455072	1	COVER PLATE, MANIFOLD LOWER BOOM		-
7	66188	4	SLIDE BEARING F34/F30-16		-
8	73090	2	SEEGER RING A45*1,75		-
9	A429201	2	HEXAGONAL SERRATED SCREW M8*20 WITH FLAN		-
10	A455639	1	DECAL DAILY INPECTION (FIN)		-
10	A454777	1	DECAL DAILY INSPECTION		-
10	A455631	1	DECAL DAILY INPECTION (GER)		-
10	A457780	1	DECAL DAILY INPECTION (NL)		-
10	A457815	1	DECAL DAILY INPECTION (ES)		-
10	A457817	1	DECAL DAILY INPECTION (PL)		-
10	A457916	1	DECAL DAILY INPECTION (DA)		-
10	A458052	1	DECAL DAILY INPECTION (SK)		-
10	A458110	1	DECAL DAILY INPECTION (SV)		-
10	A458064	1	DECAL DAILY INPECTION (NO)		-
10	A458238	1	DECAL DAILY INSPECTION (IT)		-
10	A456314	1	DECAL DAILY INPECTION (FR)		-

© This drawing is the property of Avant Tecno Oy.

© This drawing is the property of Avant Tecno Oy.

A455168 CONTROL BOX ASSEMBLY, CHASSIS

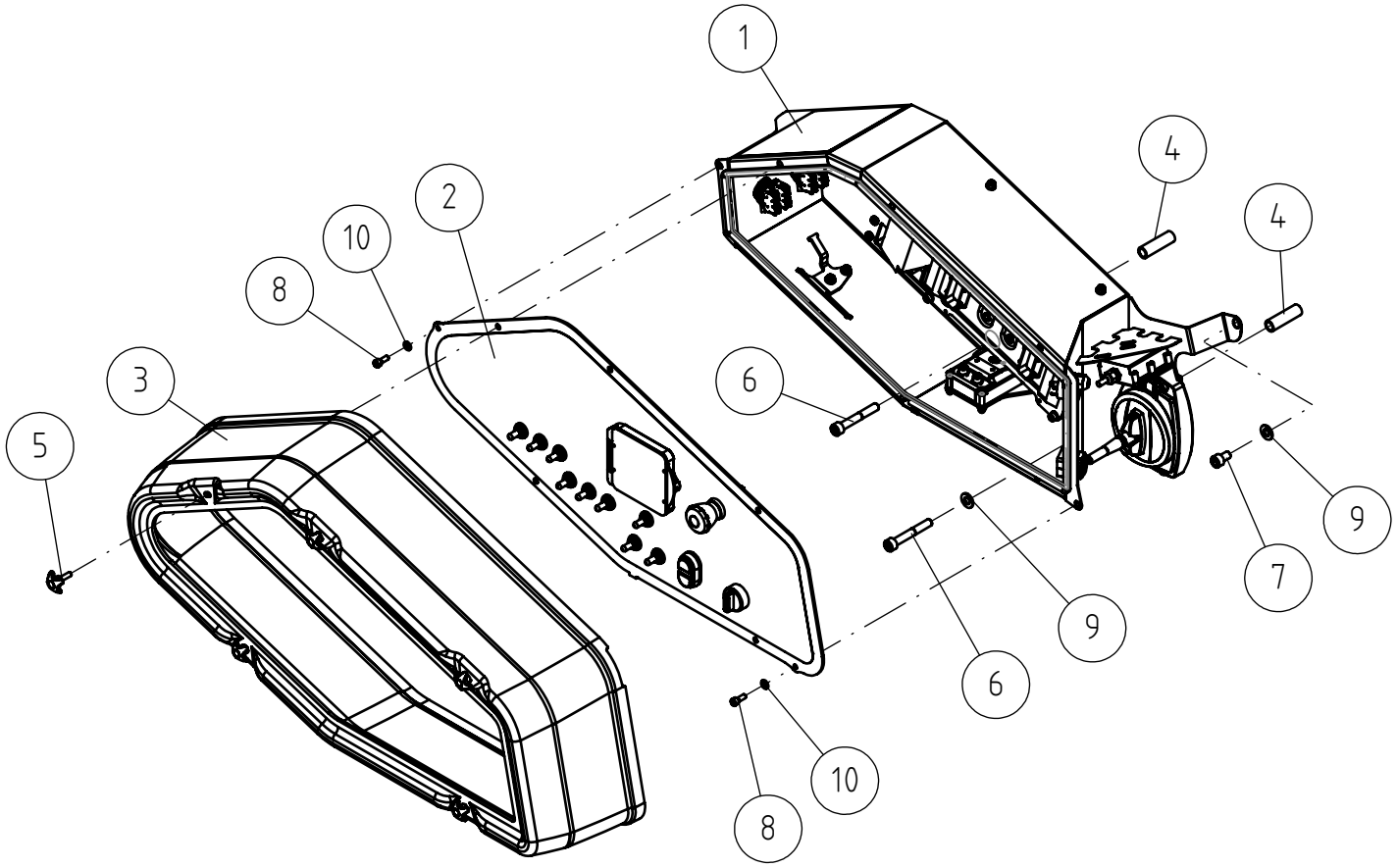

© This drawing is the property of Avant Tecno Oy.

© This drawing is the property of Avant Tecno Oy.

A455168 CONTROL BOX ASSEMBLY, CHASSIS

REF	PART NO	QTY	DESCRIPTION	NOTES	PAGE
1	A445921	1	CONNECTION BOX ON PIEDESTAL LEGUAN 220		86
2	A455166	1	CONTROL PANEL ASSEMBLY, CHASSIS		90
3	A455479	1	HOUSING, LOWER CONTROLS		-
4	A452852	2	SPACER L=54		-
5	A436239	5	STAR GRIP SCREW M6*20 BLACK		-
6	A452853	2	HEXAGONAL HEAD SCREW M10*70 DIN 912		-
7	74954	1	HEXAGONAL HEAD SCREW M10*16 DIN 912		-
8	73766	2	HEXAGONAL HEAD SCREW M6*16 DIN 912 2 8.8		-
9	73121	3	WASHER M10 A10,5 DIN 125 ZN		-
10	71680	2	WASHER M6 DIN 125		-

© This drawing is the property of Avant Tecno Oy.

© This drawing is the property of Avant Tecno Oy.

A445921 CONNECTION BOX ON PIEDESTAL LEGUAN 220

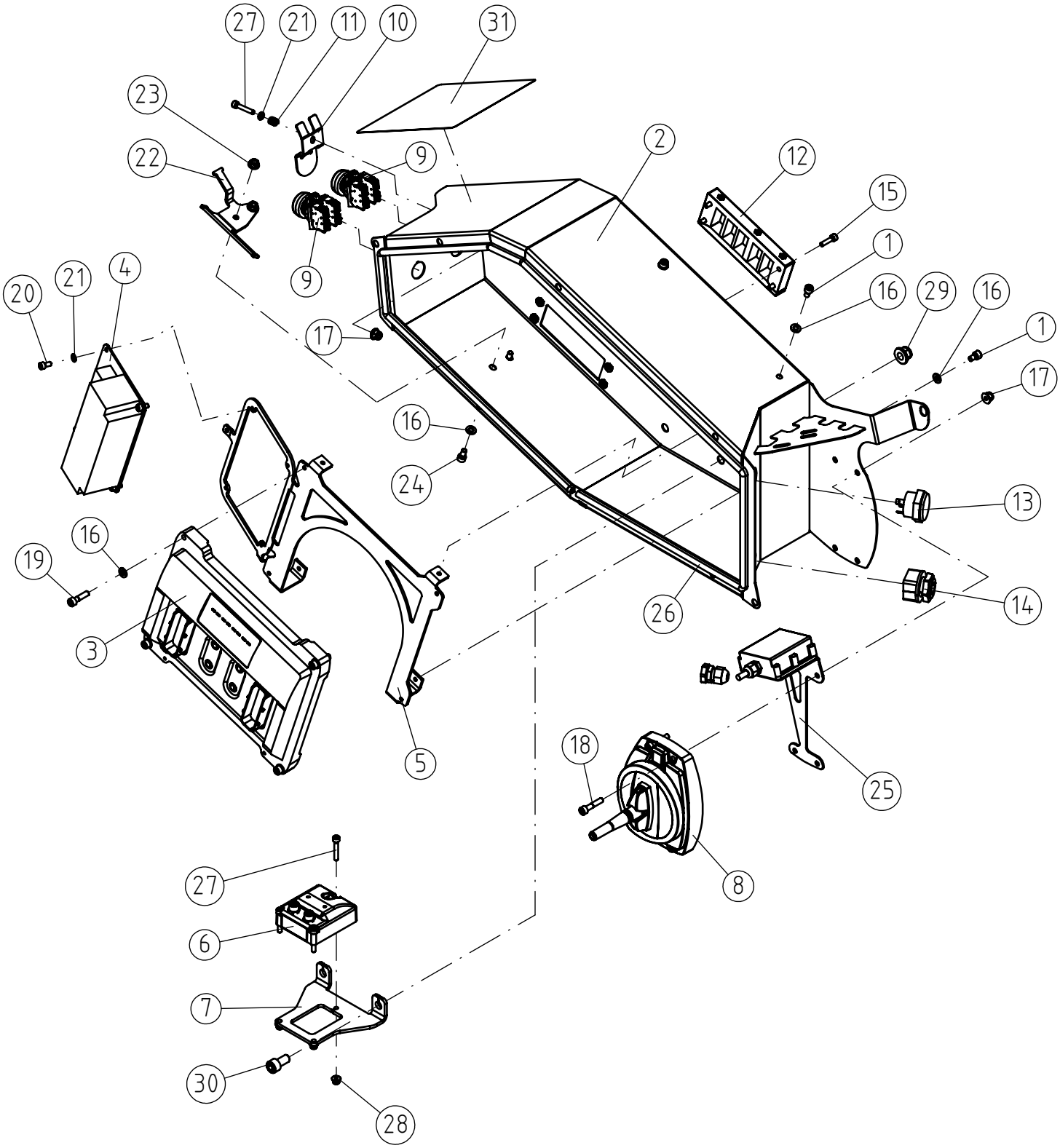

© This drawing is the property of Avant Tecno Oy.

© This drawing is the property of Avant Tecno Oy.

A445921 CONNECTION BOX ON PIEDESTAL LEGUAN 220

REF	PART NO	QTY	DESCRIPTION	NOTES	PAGE
1	75089	5	HEXAGONAL HEAD SCREW M6*10 DIN912 2		-
2	A445906	1	CONTROL BOX		-
3	A445486	1	SAFETY CONTROLLER		-
3.1	A458371	1	ETHERNET CABLE, LOGIC CONTROLLER		-
4	A449851	1	CIRCUIT BOARD CONTROL BOX PEDESTAL		-
5	A445984	1	MOUNTING BRACKET, LOGIC CONTROLLER		-
6	A457905	1	SLOPE SENSOR, CHASSIS LEGUAN 220		-
7	A455207	1	MOUNTING BRACKET, SLOPE SENSOR CHASSIS		-
8	A444346	1	RECEIVER REMOTE CONTROL 2,4 GHZ LEGUAN		-
9	A421458	2	PUSHBUTTON 2*NO WHITE		-
10	A452827	1	COVER PLATE, OVERRIDE BUTTON		-
11	65204	1	COMPRESSION SPRING 1*7*20		-
12	75011	1	CABLE ENTRY FRAME KEL-ER 24/10		-
13	64955	1	ALARM BEEPER SONITRON SCI 535 A5 F2		-
14	75033	1	CABLE GLAND, SPLIT, M25*1.5 IP54		-
15	75094	4	HEXAGONAL HEAD SCREW M5*20 DIN912 2		-
16	71680	11	WASHER M6 DIN 125		-
17	A450669	5	NUT M6 NYLOC DIN 6926		-
18	74476	4	HEXAGONAL HEAD SCREW M6* 30		-
19	71880	4	HEXAGONAL HEAD SCREW M 6*25 DIN 912 2		-
20	74471	4	HEXAG. HEAD SCREW M 5* 10 DIN 912 ZN		-
21	74448	5	WASHER M5 A5,3 DIN 125 ZN		-
22	A455653	1	BINDING BRACKET, CONNECTION BOX		-
23	A452923	2	HEXAGONAL NUT M6 DIN 6923		-
24	A429653	2	HEXAGONAL HEAD SCREW M6*12 DIN 912 2 8.8		-
25	A457387	1	GPS TRACKER ASSEMBLY		88
26	A457408	1	SEALING TAPE, CONTROL PANEL CHASSIS		-
27	74694	4	HEXAGONAL SCREW M5*30 DIN 912		-
28	A447716	3	HEXAGONAL NUT M5 NYLOC DIN 6926		-
29	A453721	1	HEXAGONAL NUT M10 NYLOC DIN 6923		-
30	A456729	1	HEXAGONAL HEAD SCREW M10*20 DIN 912		-
31	A455638	1	DECAL EMERGENCY PROCEDURES (FIN)		-
31	A454782	1	DECAL, EMERGENCY PROCEDURES		-
31	A455630	1	DECAL EMERGENCY PROCEDURES (GER)		-
31	A457779	1	DECAL EMERGENCY PROCEDURES (NL)		-
31	A457814	1	DECAL EMERGENCY PROCEDURES (ES)		-
31	A457816	1	DECAL EMERGENCY PROCEDURES (PL)		-
31	A457915	1	DECAL EMERGENCY PROCEDURES (DA)		-
31	A458051	1	DECAL EMERGENCY PROCEDURES (SK)		-
31	A458109	1	DECAL EMERGENCY PROCEDURES (SV)		-
31	A458063	1	DECAL EMERGENCY PROCEDURES (NO)		-
31	A458236	1	DECAL EMERGENCY PROCEDURES (IT)		-
31	A456315	1	DECAL EMERGENCY PROCEDURES (FR)		-

© This drawing is the property of Avant Tecno Oy.

© This drawing is the property of Avant Tecno Oy.

A457387 GPS TRACKER ASSEMBLY

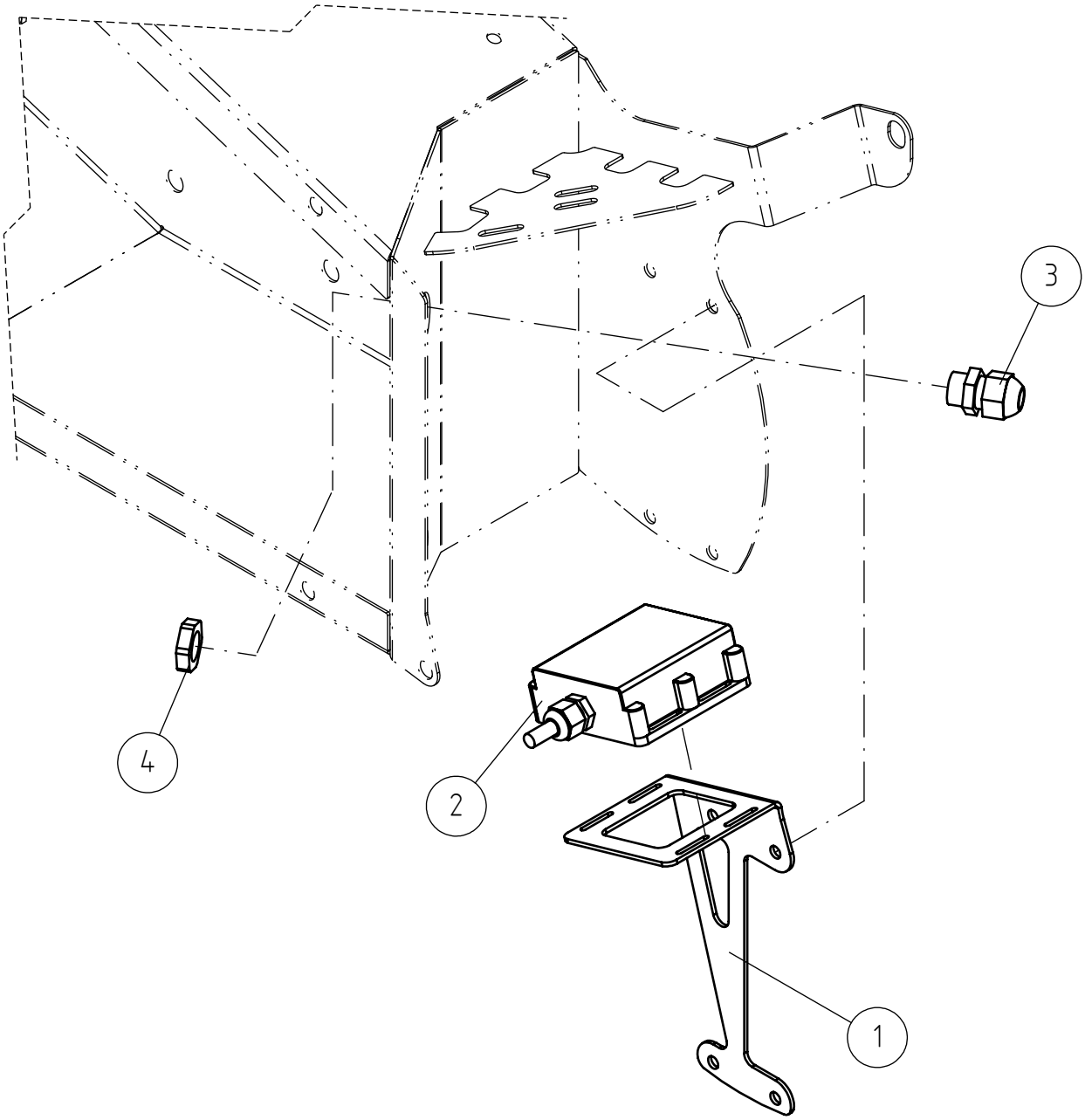

© This drawing is the property of Avant Tecno Oy.

© This drawing is the property of Avant Tecno Oy.

A457387 GPS TRACKER ASSEMBLY

REF	PART NO	QTY	DESCRIPTION	NOTES	PAGE
1	A456765	1	MOUNTING BRACKET, GPS TRACKER		-
2	A421189	1	GPS TRACKER LEGUAN		-
3	74889	1	CAP NUT CABLE GLAND, PLASTIC PG9		-
4	74894	1	LOCK NUT PG9		-

© This drawing is the property of Avant Tecno Oy.

© This drawing is the property of Avant Tecno Oy.

A455166 CONTROL PANEL ASSEMBLY, CHASSIS

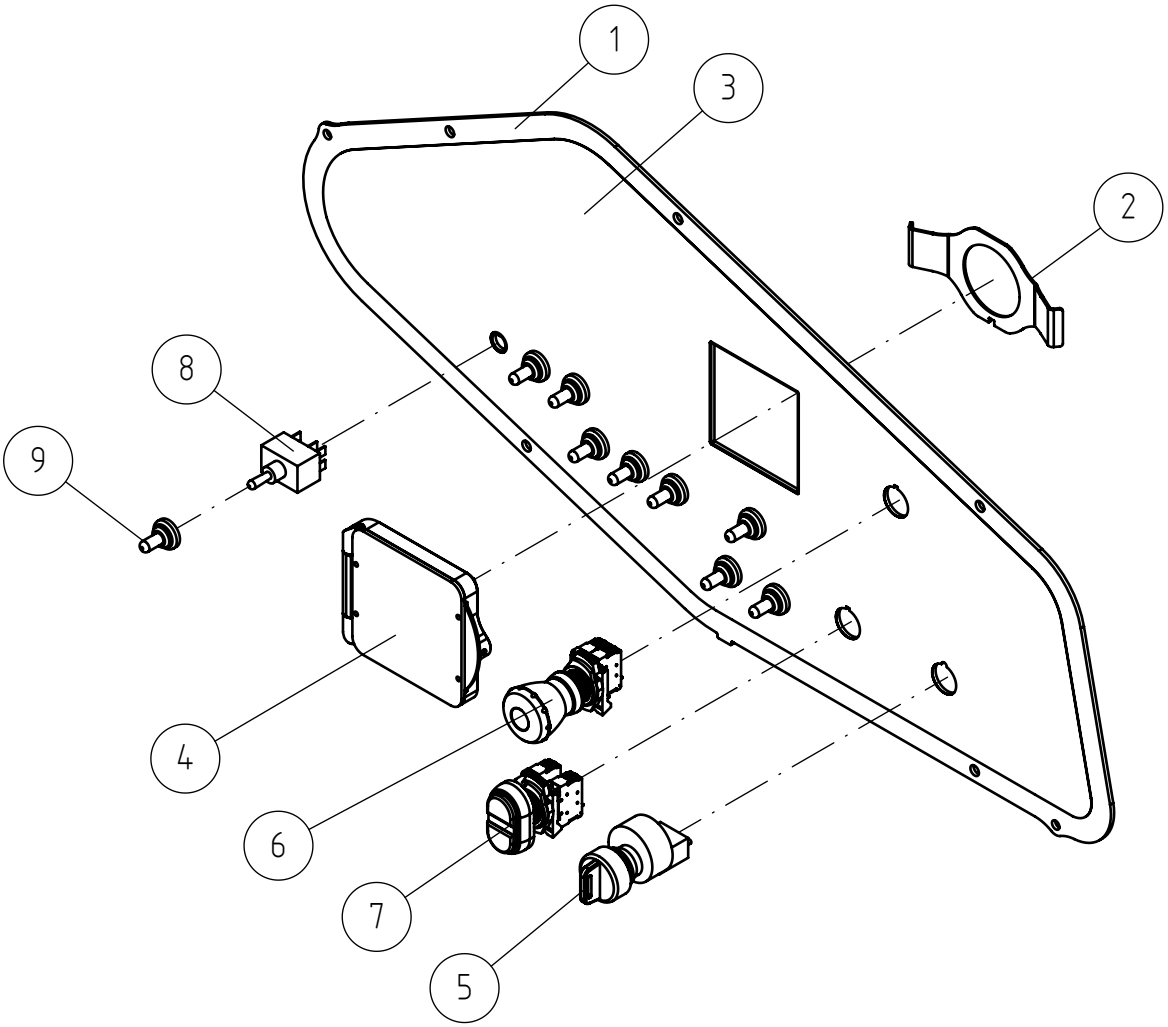

© This drawing is the property of Avant Tecno Oy.

© This drawing is the property of Avant Tecno Oy.

A455166 CONTROL PANEL ASSEMBLY, CHASSIS

REF	PART NO	QTY	DESCRIPTION	NOTES	PAGE
1	A445980	1	LID CONTROL BOX LEGUAN 220		-
2	A452851	1	LOCKING PLATE, DISPLAY		-
3	A454653	1	DECAL LOWER CONTROLS		-
4	A457922	1	DISPLAY ASSEMBLY, LOWER CONTROLS		92
5	A453221	1	KEY SWITCH, 4 POS.		-
6	A419326	1	EMERGENCY STOP 2*NC		-
7	A423431	1	PUSH BUTTONS 2 PCS + LIGHT		-
8	A430207	9	ROCKER SWITCH 3-POSITION		-
9	A430208	9	SEALING BOOT RUBBER, ROCKER SWITCH		-

© This drawing is the property of Avant Tecno Oy.

© This drawing is the property of Avant Tecno Oy.

A457922 DISPLAY ASSEMBLY, LOWER CONTROLS

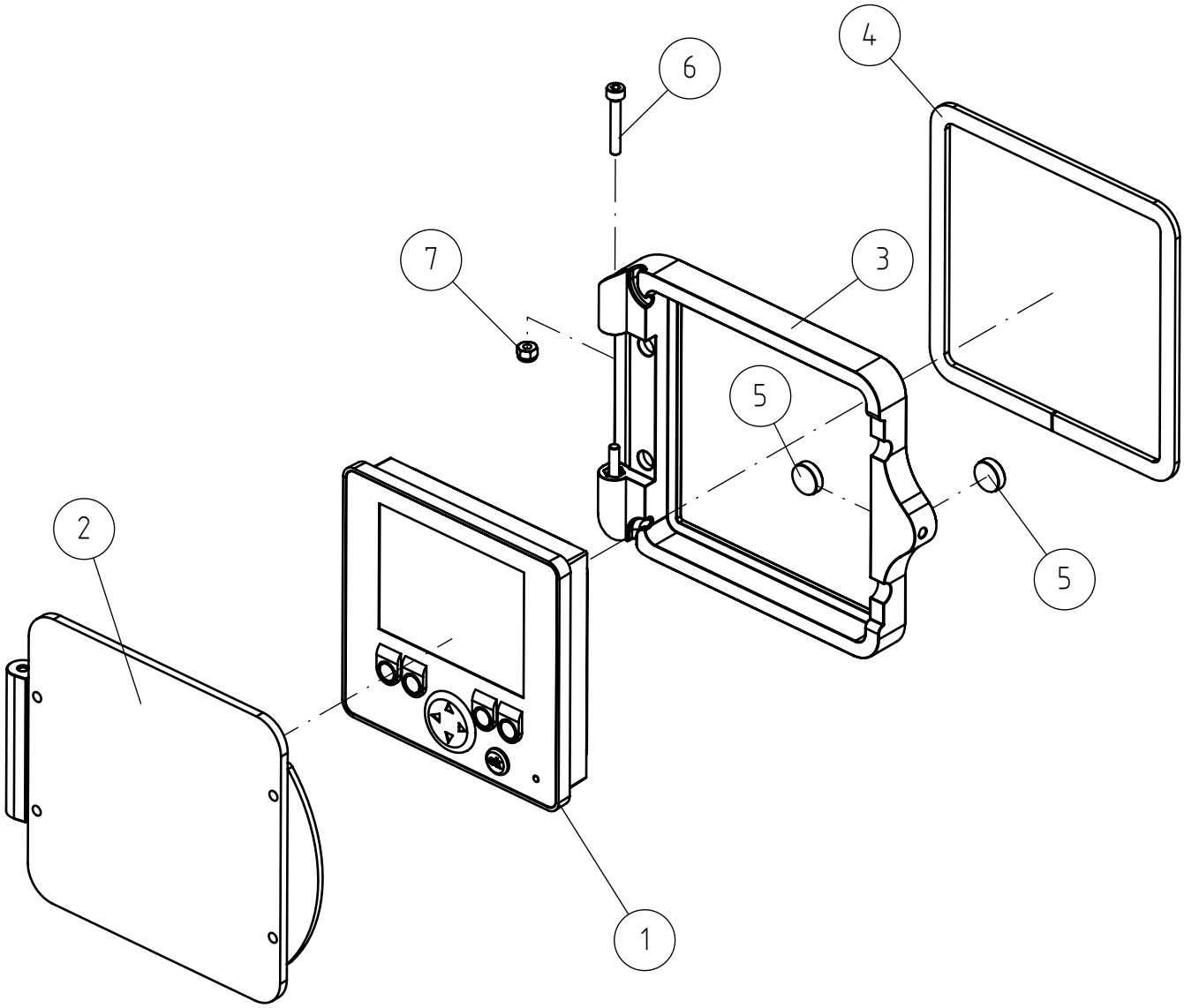

© This drawing is the property of Avant Tecno Oy.

© This drawing is the property of Avant Tecno Oy.

A457922 DISPLAY ASSEMBLY, LOWER CONTROLS

REF	PART NO	QTY	DESCRIPTION	NOTES	PAGE
1	A457924	1	DISPLAY CODED		-
2	A443717	1	LID ASSEMBLY DISPLAY LEGUAN 190		-
3	A441679	1	FRAME SCREEN PROTECTOR		-
4	A457925	1	SEALING TAPE, DISPLAY		-
5	A431704	2	MAGNET 10MM X 3MM		-
6	A435740	2	HEXAGONAL HEAD SCREW M3*20 DIN 912		-
7	75151	2	HEXAGONAL NUT M3 DIN 985 NYLOC 2		-

© This drawing is the property of Avant Tecno Oy.

© This drawing is the property of Avant Tecno Oy.

A446028 HOUSING WITH EQUIPMENT REMOTE CONTROL

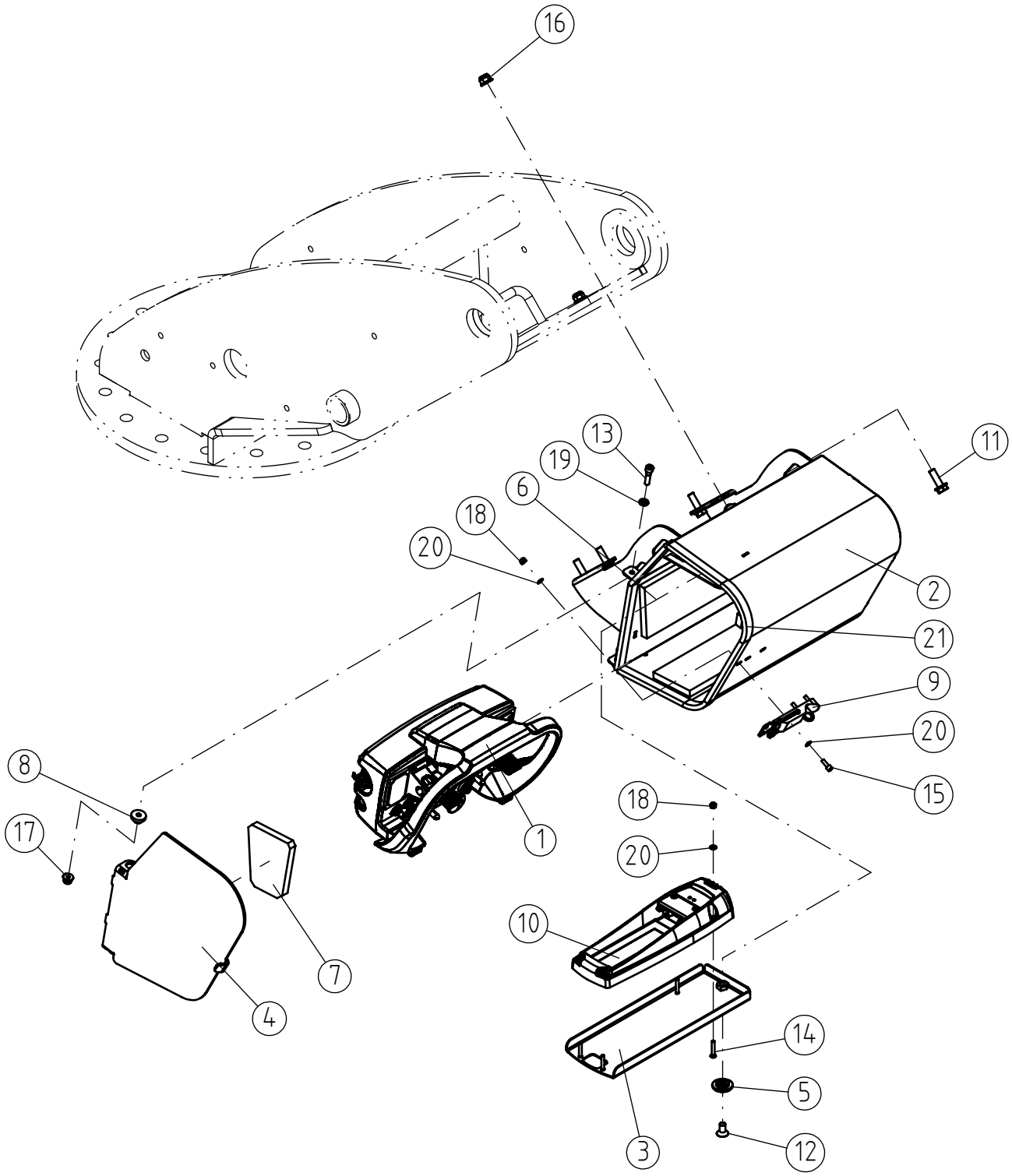

© This drawing is the property of Avant Tecno Oy.

© This drawing is the property of Avant Tecno Oy.

A446028 HOUSING WITH EQUIPMENT REMOTE CONTROL

REF	PART NO	QTY	DESCRIPTION	NOTES	PAGE
1	A435890	1	REMOTE CONTROL L190 ASSEMBLY		-
1.1	66178	1	BATTERY, REMOTE CONTROL NIMH 7.2VDC		-
2	A446850	1	BOX, REMOTE CONTROL		-
3	A422885	1	PULLOUT SHELF BOX REMOTE CONTROL UNIT		-
4	A451899	1	DOOR, REMOTE CONTROL BOX		-
5	A451999	1	SLIDE SLEEVE, CHARGER BRACKET		-
6	A432522	1	PADDING, BOX REMOTE CONTROL		-
7	A432521	1	PADDING, DOOR, BOX REMOTE CONTROL		-
8	A420735	2	BUSHING, LOWER CONTROLS LEGUAN 160M2		-
9	A432310	1	LATCH + HOOK		-
10	66177	1	BATTERY CHARGER SCANRECO 230VAC		-
11	A429202	4	HEXAGONAL SERRATED SCREW M8*25 WITH FLAN		-
12	74938	1	COUNTERSUNK HEAD SCREW M8*16		-
13	71880	2	HEXAGONAL HEAD SCREW M 6*25 DIN 912 2		-
14	74582	4	CROSS-SLOT COUNTERSUNK HEAD SCREW M4*25		-
15	75090	3	HEXAGONAL HEAD SCREW M4*12 DIN912 2		-
16	A447717	4	HEXAGONAL NUT M8 NYLOC DIN 6926		-
17	A450669	2	NUT M6 NYLOC DIN 6926		-
18	72313	7	HEXAGONAL NUT M4 DIN 985 NYLOC		-
19	71680	2	WASHER M6 DIN 125		-
20	75097	10	WASHER M4 A4,3 DIN 125		-
21	A454055	1	WEATHER STRIP, REMOTE CONTROL BOX		-

© This drawing is the property of Avant Tecno Oy.

© This drawing is the property of Avant Tecno Oy.

A446450 HYDRAULIC MANIFOLD, LOWER BOOM

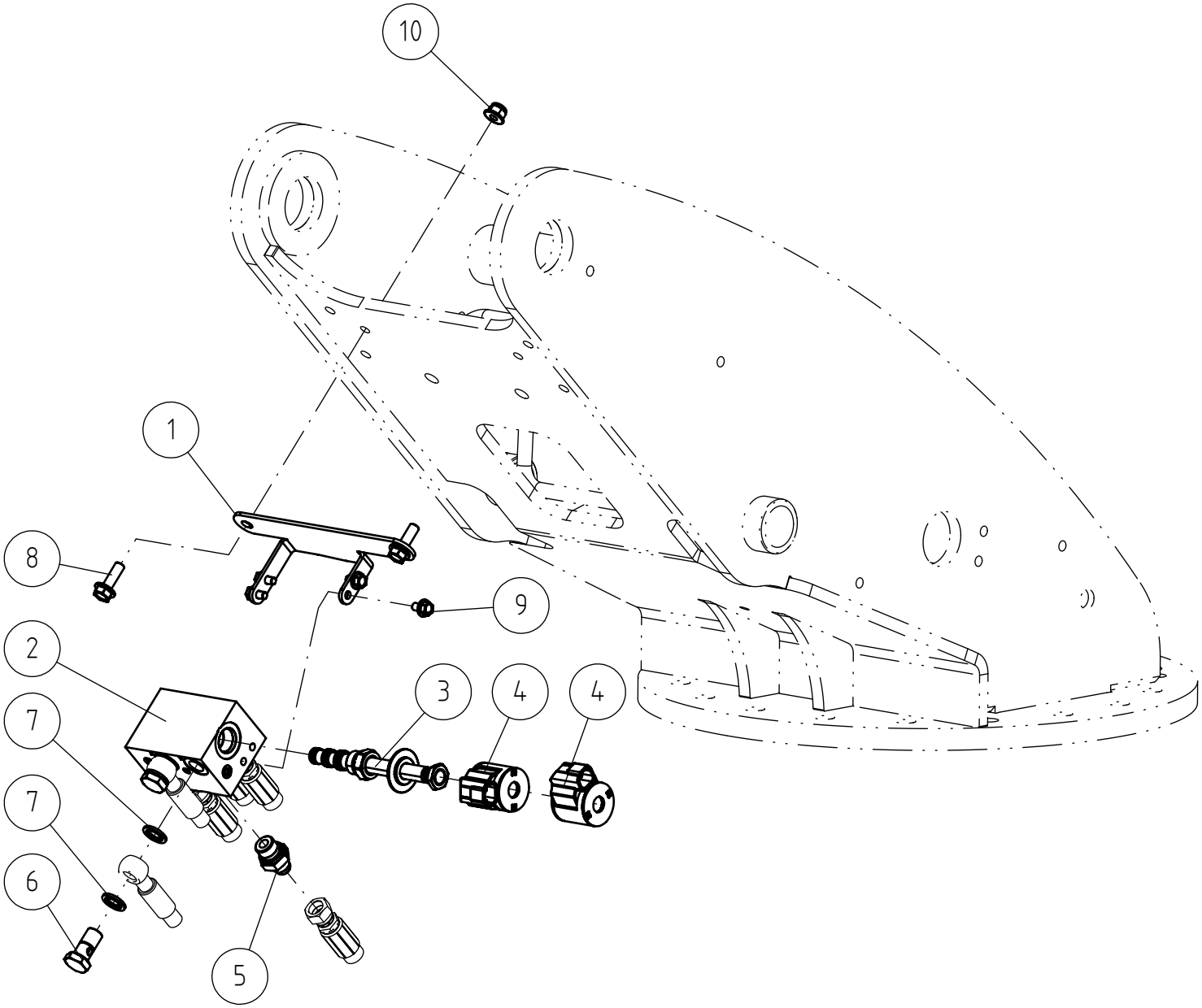

© This drawing is the property of Avant Tecno Oy.

© This drawing is the property of Avant Tecno Oy.

A446450 HYDRAULIC MANIFOLD, LOWER BOOM

REF	PART NO	QTY	DESCRIPTION	NOTES	PAGE
1	A446622	1	MOUNTING BRACKET, HYDR. MANIFOLD LOWER		-
2	A446448	1	HYDRAULIC MANIFOLD BOOM LIFT LEGUAN 220		-
3	A434710	1	PROPORTIONAL VALVE CARTRIDGE	A434710 Install torque 35 Nm, end nut 6 Nm	-
3.1	A443085	1	SEAL KIT VALVE CARTRIDGE SK08-4N-MMM		-
4	A444551	2	SOLENOID 12V DEUTSCH CONNECTOR 08		-
5	64041	4	BASIC FITTING F40XS10-3/8 /8		-
6	64557	2	BANJO BOLT R 1/4"		-
7	73757	4	USIT COMPRESSION R1/4"		-
8	A429202	2	HEXAGONAL SERRATED SCREW M8*25 WITH FLAN		-
9	A431969	4	HEXAGONAL SERRATED SCREW M6*10 W. FLANG		-
10	A447717	2	HEXAGONAL NUT M8 NYLOC DIN 6926		-

© This drawing is the property of Avant Tecno Oy.

© This drawing is the property of Avant Tecno Oy.

A446083 LOWER BOOM 1 ASSEMBLY LEGUAN 220

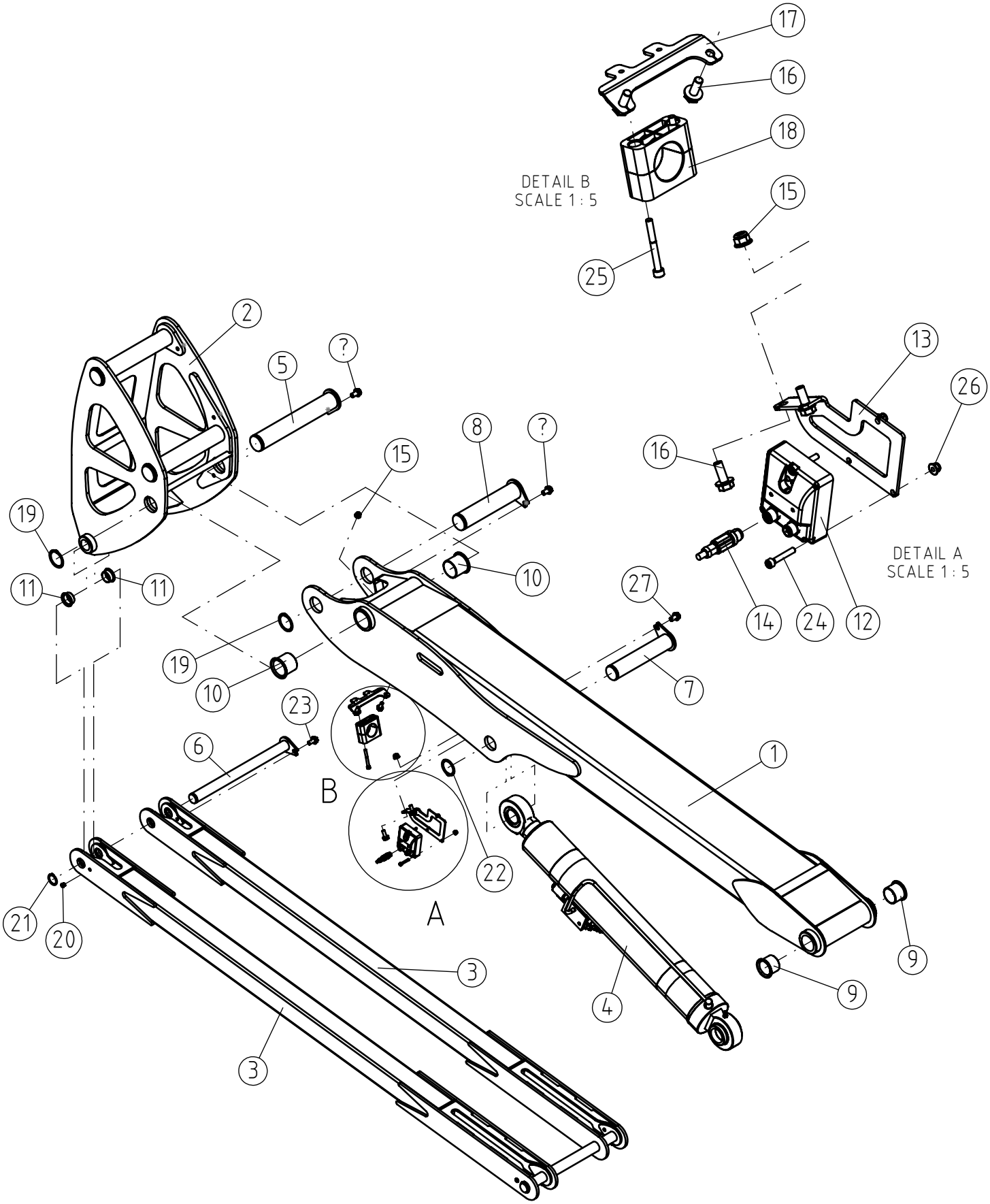

© This drawing is the property of Avant Tecno Oy.

© This drawing is the property of Avant Tecno Oy.

A446083 LOWER BOOM 1 ASSEMBLY LEGUAN 220

REF	PART NO	QTY	DESCRIPTION	NOTES	PAGE
1	A446082	1	LOWER BOOM 1 LEGUAN 220		-
2	A446084	1	KNUCKLE PIECE 1 LEGUAN 220		-
3	A446087	2	SELF LEVELLING ROD, LOWER BOOM		-
4	A446431	1	LIFT CYLINDER ASSEMBLY LEGUAN 220		100
5	A454045	3	PIVOT PIN F=50 L=303		-
6	A446273	2	PIVOT PIN F=30 L=378		-
7	A446437	1	PIVOT PIN F=45 L=223		-
8	A447914	1	PIVOT PIN F=50 L=223		-
9	66190	2	SLIDE BEARING F50/F45-40		-
10	66333	2	SLIDE BEARING F55/F50-50 WITH FLANG		-
11	66188	4	SLIDE BEARING F34/F30-16		-
12	A457907	1	SLOPE SENSOR, LOWER BOOM LEGUAN 220		-
13	A446434	1	MOUNTING BRACKET, SLOPE SENSOR LOWER		-
14	66136	1	TERMINATION RESISTOR CAN OPEN		-
15	A447717	4	HEXAGONAL NUT M8 NYLOC DIN 6926		-
16	A429201	4	HEXAGONAL SERRATED SCREW M8*20 WITH FLAN		-
17	A446682	1	MOUNTING BRACKET, HOSE CLAMP		-
18	A457355	1	PIPE CLAMP D38		-
19	74810	4	SEEGER RING		-
20	74996	2	PLUG, PLASTIC, F12/F8,5 FOR ROUND TUBE		-
21	74409	2	SEEGER RING A30*1,5 DIN 471		-
22	73090	1	SEEGER RING A45*1,75		-
23	A432196	2	HEXAGONAL SERRATED SCREW M10*20 W. FLANG		-
24	74694	3	HEXAGONAL SCREW M5*30 DIN 912		-
25	74478	2	HEXAGONAL HEAD SCREW M6* 55		-
26	A447716	3	HEXAGONAL NUT M5 NYLOC DIN 6926		-
27	A436874	5	HEXAGONAL SCREW M12*20 2		-

© This drawing is the property of Avant Tecno Oy.

© This drawing is the property of Avant Tecno Oy.

A446431 LIFT CYLINDER ASSEMBLY LEGUAN 220

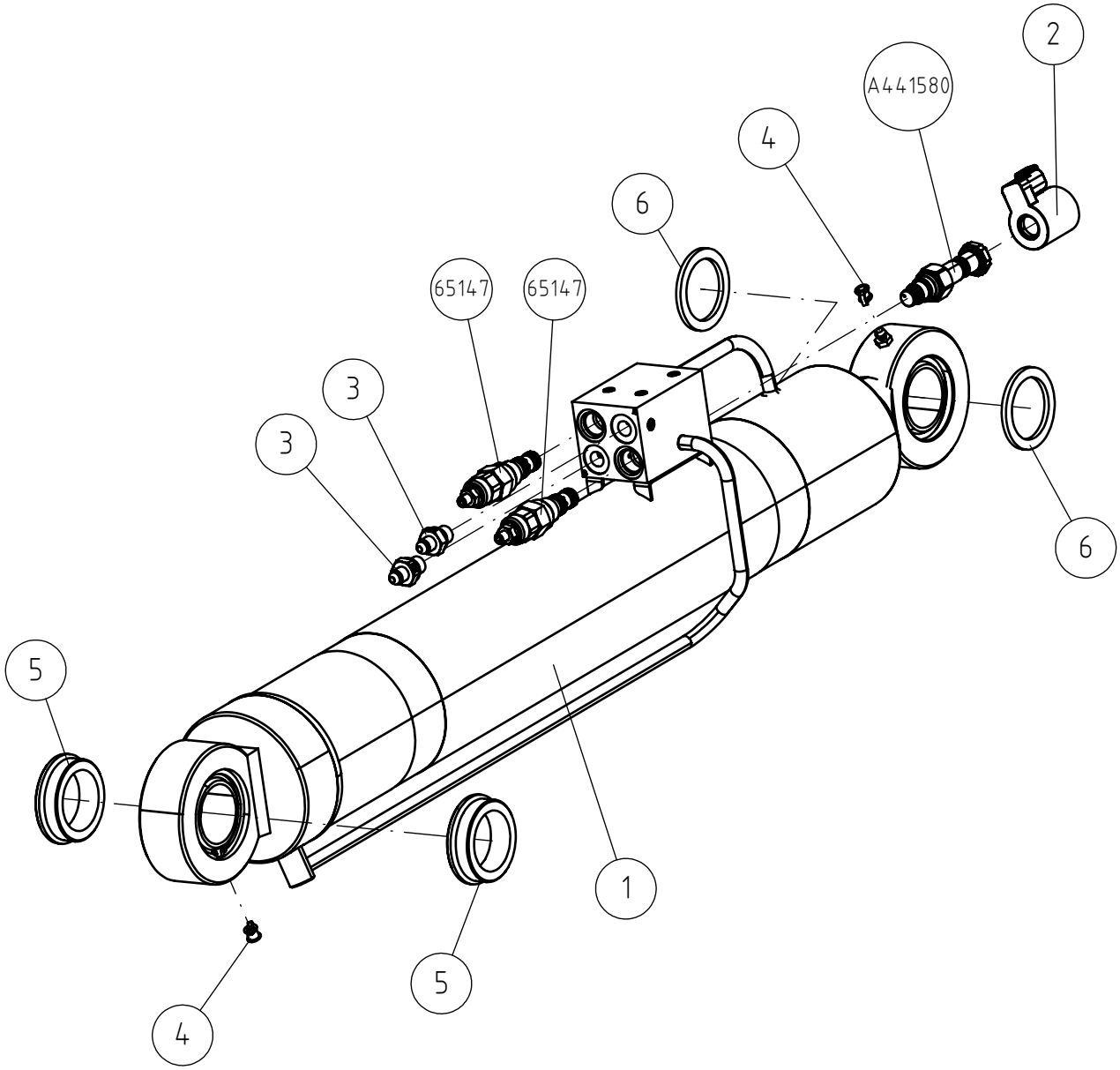

© This drawing is the property of Avant Tecno Oy.

© This drawing is the property of Avant Tecno Oy.

A446431 LIFT CYLINDER ASSEMBLY LEGUAN 220

REF	PART NO	QTY	DESCRIPTION	NOTES	PAGE
1	A446086	1	HYDR. CYLINDER ASSEMBLY, LOWER BOOM		-
1.1	65147	2	VALVE CARTRIDGE LOAD CONTROL VALVE	65147 Install torque 40 Nm, end nut 15 Nm	-
1.2	A441580	1	VALVE CARTRIDGE 2-WAY POPPET TYPE	A441580 Install torque 45 Nm	-
1.3	A458385	1	SEAL KIT HYDR. CYL. 100/63		-
2	A441592	1	SOLENOID 12VDC / 20W DEUTSCH CONNECTOR		-
3	64678	2	BASIC FITTING F40XS6-1/4"		-
4	A456064	2	CAP, GREASE NIPPLE		-
5	A457421	2	SPACER D62/D45		-
6	A418134	2	SPACER D63*D45X3 LEGUAN		-

© This drawing is the property of Avant Tecno Oy.

© This drawing is the property of Avant Tecno Oy.

A446058 LOWER BOOM 2 ASSEMBLY LEGUAN 220

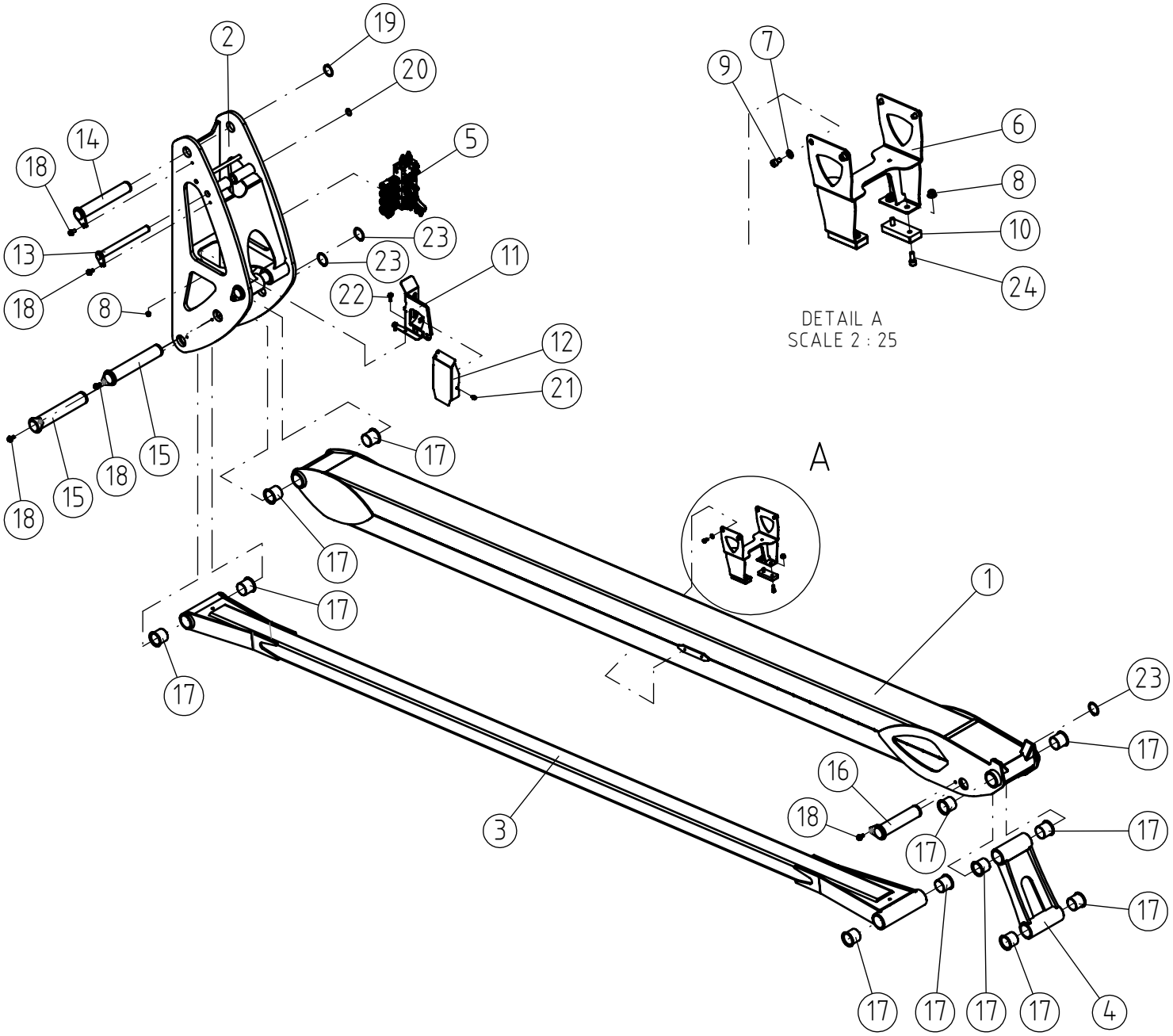

© This drawing is the property of Avant Tecno Oy.

© This drawing is the property of Avant Tecno Oy.

A446058 LOWER BOOM 2 ASSEMBLY LEGUAN 220

REF	PART NO	QTY	DESCRIPTION	NOTES	PAGE
1	A446057	1	LOWER BOOM 2 LEGUAN 220		-
2	A446064	1	KNUCKLE PIECE 2 LEGUAN 220		-
3	A446067	1	SELF LEVELLING ROD, MIDDLE BOOM		-
4	A446068	1	REACTION ROD LOWER BOOM		-
5	A445482	1	HYDR. MANIFOLD ASSEMBLY, BOOM		104
6	A446771	1	TRANSPORT SUPPORT, LOWER BOOM		-
7	73122	4	WASHER M8 A8,4 DIN 125 ZN		-
8	A447717	6	HEXAGONAL NUT M8 NYLOC DIN 6926		-
9	74932	4	HEXAGONAL HEAD SCREW M8*12		-
10	A444547	2	WEAR PAD REAR LOWER MIDDLE BOOM LEGUAN		-
11	A452253	1	GUIDE BRACKET, KNUCKLE PIECE		-
12	A453830	1	COVER PLATE, COUPLINGS		-
13	A445429	1	PIVOT PIN F=25 L=275		-
14	A445426	2	PIVOT PIN F=45 L=275		-
15	A447910	2	PIVOT PIN F=50 L=275		-
16	A446069	1	PIVOT PIN F=50 L=275		-
17	66333	12	SLIDE BEARING F55/F50-50 WITH FLANG		-
18	A432196	6	HEXAGONAL SERRATED SCREW M10*20 W. FLANG		-
19	73090	2	SEEGER RING A45*1,75		-
20	73326	1	SEEGER RING A25*1,2		-
21	A431969	1	HEXAGONAL SERRATED SCREW M6*10 W. FLANG		-
22	A429202	2	HEXAGONAL SERRATED SCREW M8*25 WITH FLAN		-
23	74810	3	SEEGER RING		-
24	74481	4	HEXAGONAL HEAD SCREW M8*20 DIN 912 ZN		-

© This drawing is the property of Avant Tecno Oy.

© This drawing is the property of Avant Tecno Oy.

A445482 HYDR. MANIFOLD ASSEMBLY, BOOM

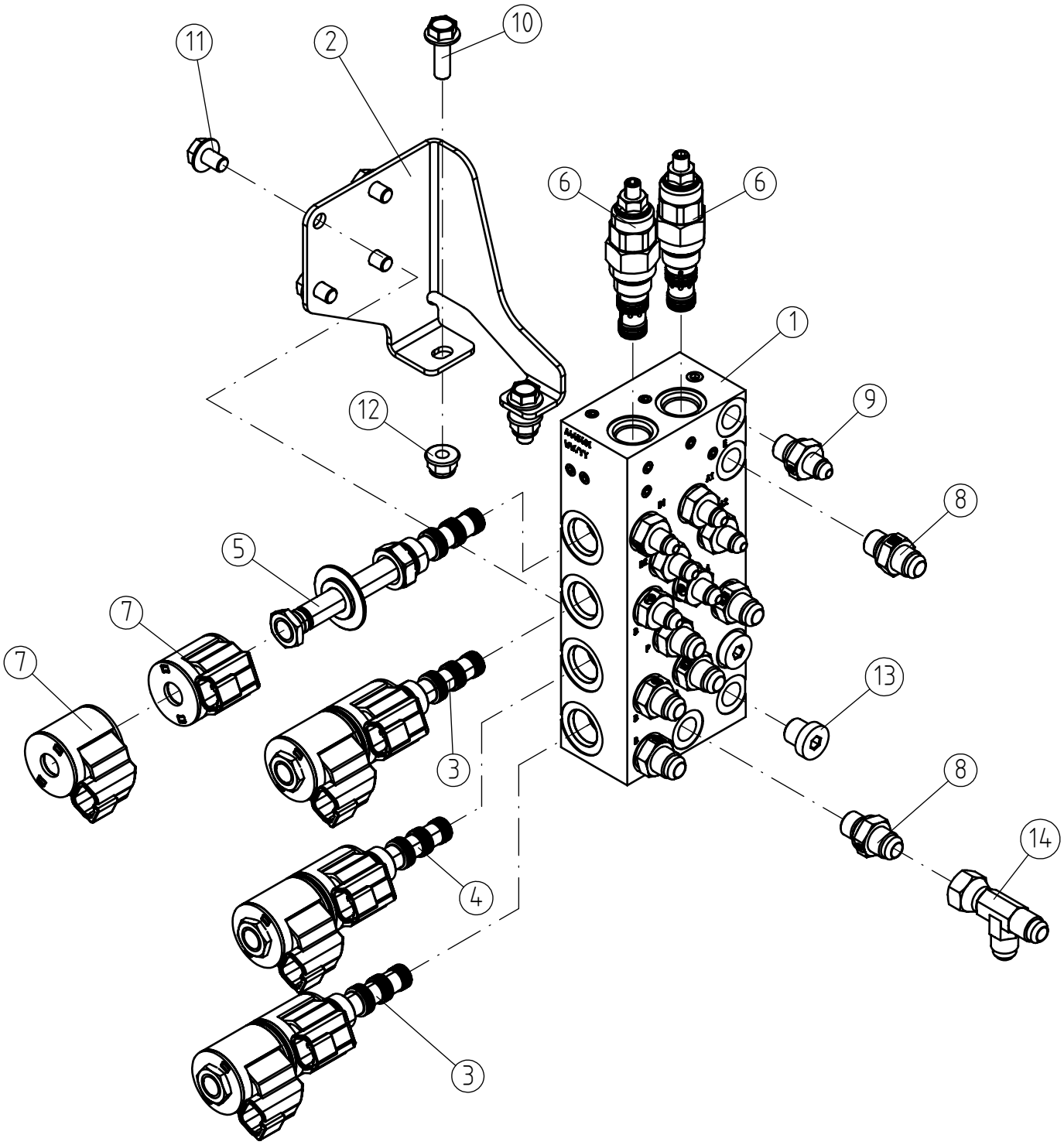

© This drawing is the property of Avant Tecno Oy.

© This drawing is the property of Avant Tecno Oy.

A445482 HYDR. MANIFOLD ASSEMBLY, BOOM

REF	PART NO	QTY	DESCRIPTION	NOTES	PAGE
1	A445481	1	HYDRAULIC MANIFOLD, BOOM MANIFOLD		-
2	A447333	1	MOUNTING BRACKET, BOOM MANIFOLD		-
3	A434710	2	PROPORTIONAL VALVE CARTRIDGE	A434710 Install torque 35 Nm, end nut 6 Nm	-
3.1	A443085	1	SEAL KIT VALVE CARTRIDGE SK08-4N-MMM		-
4	A445539	1	PROPORTIONAL VALVE CARTRIDGE 4/3		-
5	A454498	1	PROPORTIONAL VALVE CARTRIDGE 4/3		-
6	65147	2	VALVE CARTRIDGE LOAD CONTROL VALVE	65147 Install torque 40 Nm, end nut 15 Nm	-
7	A444551	8	SOLENOID 12V DEUTSCH CONNECTOR 08		-
8	64059	7	BASIC FITTING F40XS10-1/4		-
9	64678	7	BASIC FITTING F40XS6-1/4"		-
10	A429202	2	HEXAGONAL SERRATED SCREW M8*25 WITH FLAN		-
11	A429197	4	HEXAGONAL SERRATED SCREW M8*12 W. FLANGE		-
12	A447717	2	HEXAGONAL NUT M8 NYLOC DIN 6926		-
13	64700	2	HEXAGONAL PLUG R 1/4"		-
14	64078	1	L-FITTING BODY R6XS10		-

© This drawing is the property of Avant Tecno Oy.

© This drawing is the property of Avant Tecno Oy.

A444563 UPPER BOOM ASSEMBLY LEGUAN 220

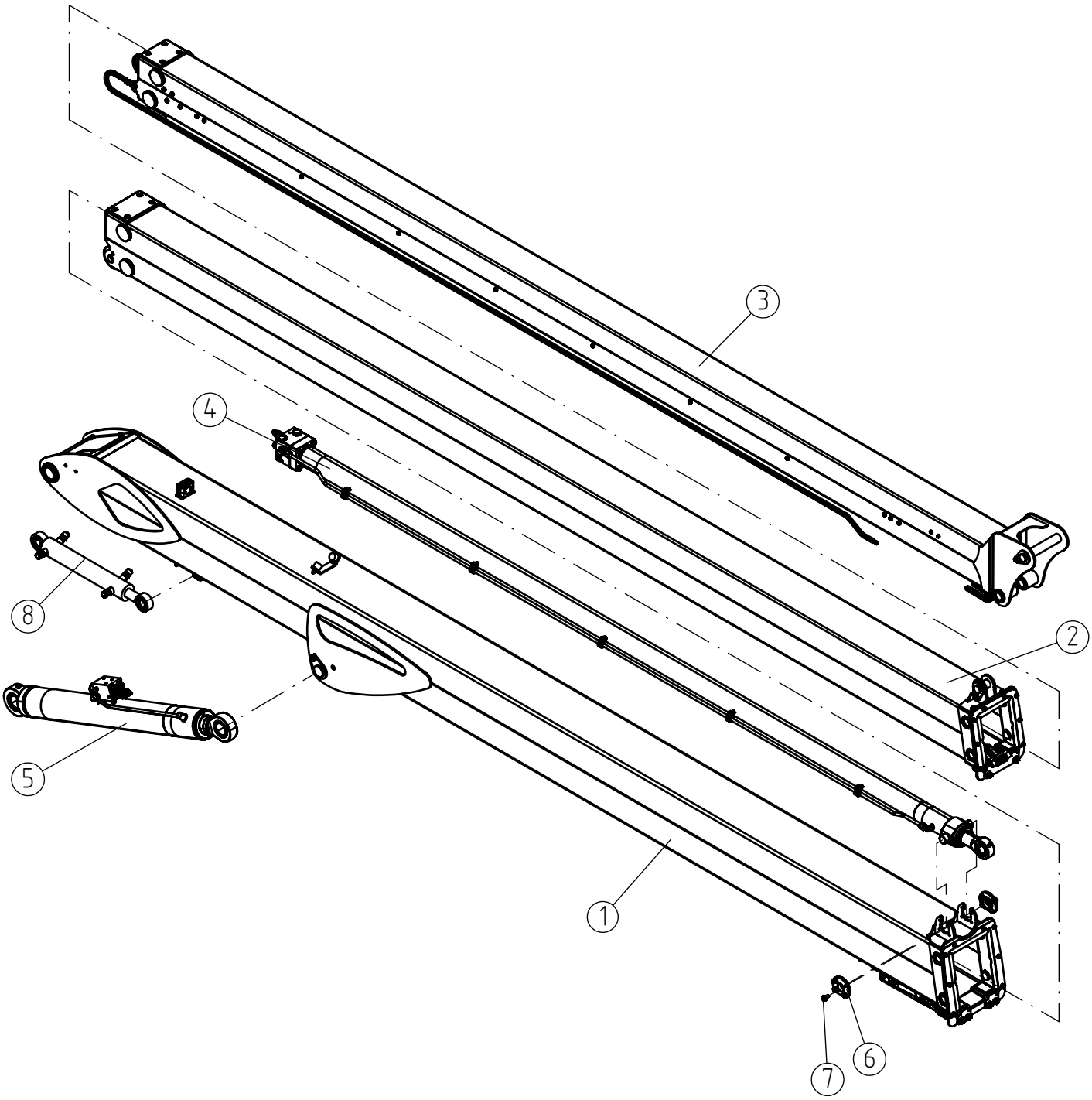

© This drawing is the property of Avant Tecno Oy.

© This drawing is the property of Avant Tecno Oy.

A444563 UPPER BOOM ASSEMBLY LEGUAN 220

REF	PART NO	QTY	DESCRIPTION	NOTES	PAGE
1	A444561	1	UPPER BOOM WITH CHAIN LEGUAN 220		108
2	A444556	1	MIDDLE BOOM ASSEMBLY LEGUAN 220		112
3	A444541	1	TELESCOPIC BOOM ASSEMBLY LEGUAN 220		116
4	A445220	1	TELESCOPIC CYLINDER ASSEMBLY LEGUAN 220		118
5	A445143	1	HYDR. CYLINDER UPPER BOOM WITH VALVES		120
6	A421817	2	MOUNTING FLANGE HYDR. CYLINDER L190		-
7	A429200	8	HEXAGONAL SERRATED SCREW M8*16 WITH FLAN		-
8	A453697	1	MAIN SELF LEVELLING CYL. ASSEMBLY		-

© This drawing is the property of Avant Tecno Oy.

© This drawing is the property of Avant Tecno Oy.

A444561 UPPER BOOM WITH CHAIN LEGUAN 220

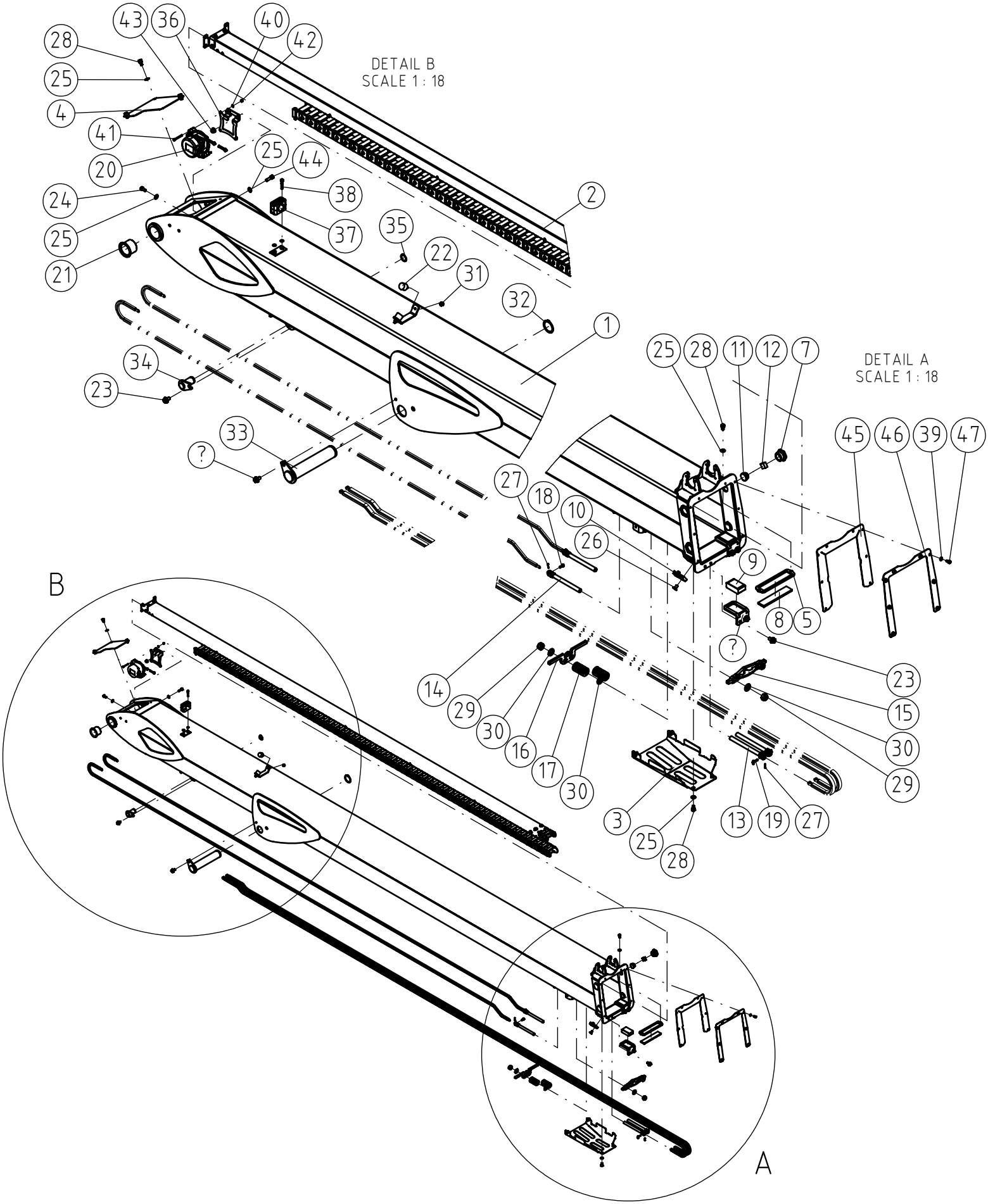

© This drawing is the property of Avant Tecno Oy.

© This drawing is the property of Avant Tecno Oy.

A444561 UPPER BOOM WITH CHAIN LEGUAN 220

REF	PART NO	QTY	DESCRIPTION	NOTES	PAGE
1	A444562	1	UPPER BOOM LEGUAN 220		-
2	A445164	1	ALUMINIUM CHANNEL CABLE CARRIER CHAIN		110
3	A444569	1	PROTECTIVE COVER, CHAIN TIGHTENER		-
4	A445159	1	COVER PLATE, UPPER BOOM		-
5	A444567	1	BRACKET, WEAR PAD UPPER		-
6	A421806	2	BRACKET LOWER, UPPER BOOM L190		-
7	A421771	4	TIGHTENING BOLT MIDDLE BOOM L190		-
8	A444568	1	WEAR PAD FRONT UP TELESCOPIC BOOM LEGUAN		-
9	A421808	2	WEAR PAD FRONT DOWN MIDDLE BOOM L190		-
10	A422415	2	WEAR PAD REAR UPPER BOOM L190		-
11	A421773	4	WEAR PAD SIDE, MIDDLE BOOM L190		-
12	A422853	4	RUBBER PAD TELESCOPIC BOOM L190		-
13	66472	2	CLEVIS M14-172, LEAF CHAIN 4X4		-
14	A423384	2	CLEVIS, LEAF CHAIN		-
15	A444879	1	ROCKING PLATE, RETRACTION CHAIN		-
16	A444878	1	ROCKING PLATE, EXTENSION CHAIN		-
17	66471	2	COMPRESSION SPRING 32*16*76 ISO10243 RED		-
18	A444499	2	AXLE, LEAF CHAIN		-
19	66474	2	CLEVIS PIN F5,08-32, LEAF CHAIN		-
20	A430288	1	SENSOR, LENGTH-ANGLE, CODED, L190		-
21	66190	2	SLIDE BEARING F50/F45-40		-
22	65238	2	RUBBER MOUNT, CYLINDRICAL		-
23	A457766	6	HEXAGONAL SCREW M10*16 FLANGE		-
24	A445145	4	HEXAGONAL HEAD SCREW M8*16 DIN 7984		-
25	73122	15	WASHER M8 A8,4 DIN 125 ZN		-
26	74938	4	COUNTERSUNK HEAD SCREW M8*16		-
27	75153	6	COTTER PIN 1.6*16 DIN 94		-
28	74932	9	HEXAGONAL HEAD SCREW M8*12		-
29	72327	4	HEXAGONAL NUT M 14 NYLOC DIN 985		-
30	73384	6	WASHER M14 A15 DIN 125 ZN		-
31	A450669	2	NUT M6 NYLOC DIN 6926		-
32	73090	1	SEEGER RING A45*1,75		-
33	A454047	1	PIVOT PIN F=45 L=217		-
34	A420433	1	PIVOT PIN F25 L=43		-
35	73326	1	SEEGER RING A25*1,2		-
36	A452064	1	MOUNTING BRACKET, LENGHT-ANGLE SENSOR		-
37	A453677	1	PIPE CLAMP D=28		-
38	A427068	2	HEXAGONAL HEAD SCREW M6*35 DIN 912 2		-
39	71680	10	WASHER M6 DIN 125		-
40	75097	3	WASHER M4 A4,3 DIN 125		-
41	75149	3	HEXAGONAL HEAD SCREW M4*40 DIN 912 2		-
42	72313	3	HEXAGONAL NUT M4 DIN 985 NYLOC		-
43	A447717	2	HEXAGONAL NUT M8 NYLOC DIN 6926		-
44	71884	2	HEXAGONAL HEAD SCREW M 8*25 DIN 912 2		-
45	A454185	1	WIPER, UPPER BOOM		-
46	A454186	1	MOUNTING PLATE, WIPER UPPER BOOM		-
47	A429653	8	HEXAGONAL HEAD SCREW M6*12 DIN 912 2 8.8		-

© This drawing is the property of Avant Tecno Oy.

© This drawing is the property of Avant Tecno Oy.

A445164 ALUMINIUM CHANNEL CABLE CARRIER CHAIN

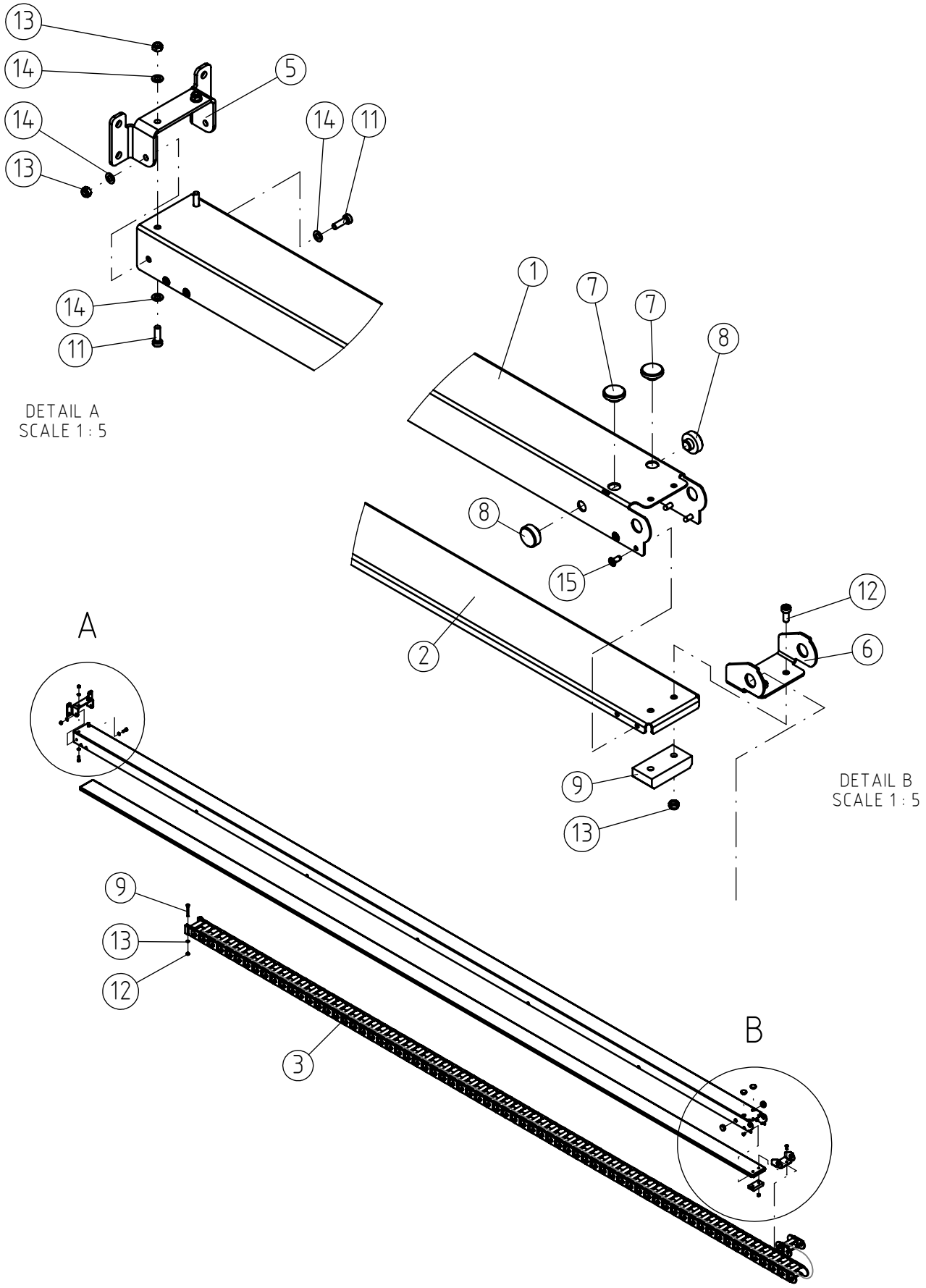

© This drawing is the property of Avant Tecno Oy.

© This drawing is the property of Avant Tecno Oy.

A445164 ALUMINIUM CHANNEL CABLE CARRIER CHAIN

REF	PART NO	QTY	DESCRIPTION	NOTES	PAGE
1	A445162	1	U-PROFILE CABLE CARRIER CHAIN L220		-
2	A445163	1	BOTTOM, INNER CHUTE		-
3	A444461	1	CABLE CARRIER CHAIN LEGUAN 220		-
4	A444631	1	MOUNTING BRACKET, INNER CHUTE		-
5	A444582	1	MOUNTING BRACKET, CABLE CARRIER CHAIN		-
6	A444251	2	BEARING CABLE CARRIER CHAIN LEGUAN 220		-
7	A444263	2	WEAR PAD, CABLE CARRIER CHAIN		-
8	A444189	1	WEAR PAD ALUMINIUM CHANNEL LEGUAN 220		-
9	A436057	2	HEXAGONAL HEAD SCREW M5*45 DIN 912 ZN		-
10	A445160	4	HEX. HEAD SCREW M5*16 DIN 7984		-
11	A444756	2	HEX. HEAD SCREW M5*12 DIN 7984		-
12	72315	8	NUT M5 NYLOC DIN 985		-
13	74448	10	WASHER M5 A5,3 DIN 125 ZN		-
14	A445150	18	BLIND RIVET 4,0*8		-

© This drawing is the property of Avant Tecno Oy.

© This drawing is the property of Avant Tecno Oy.

A444556 MIDDLE BOOM ASSEMBLY LEGUAN 220

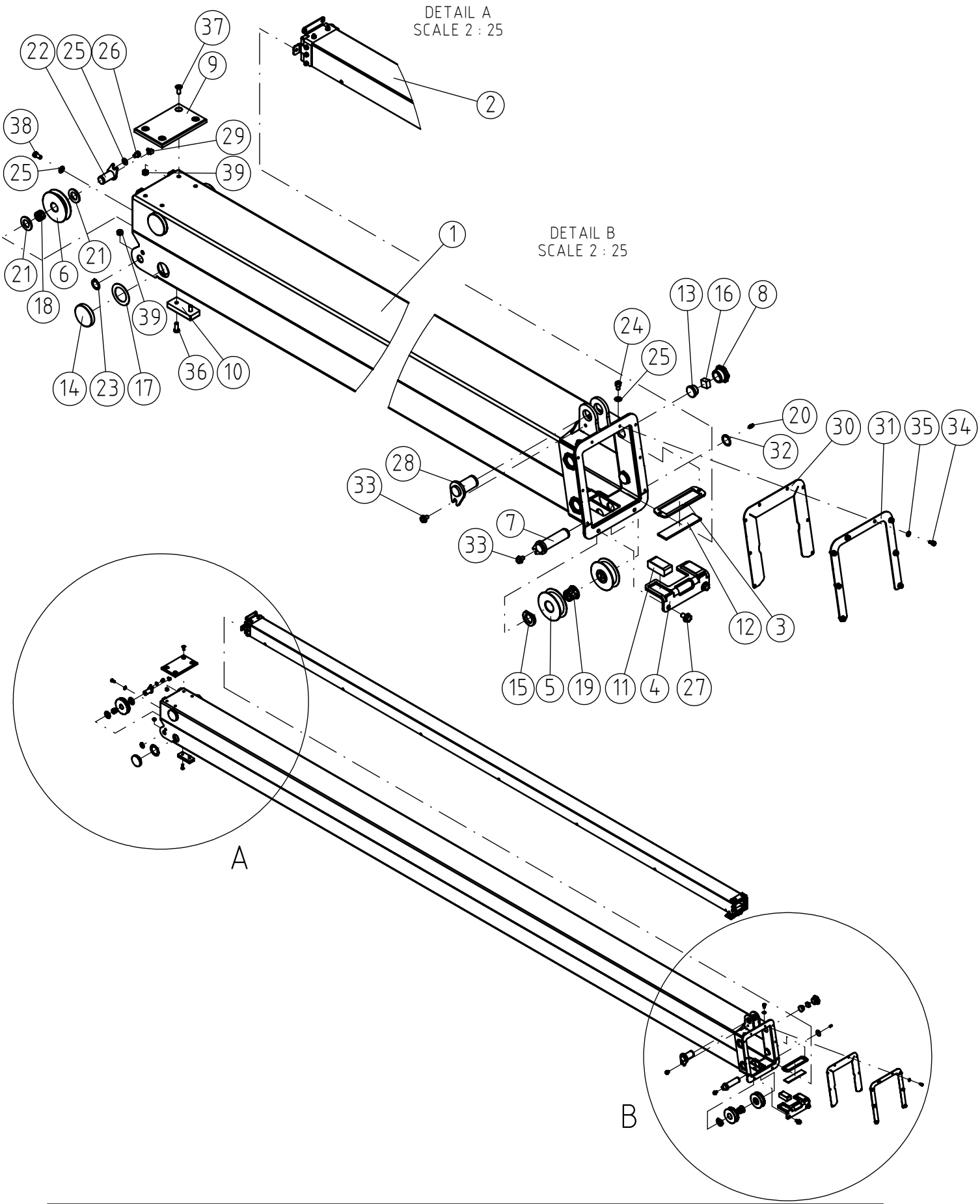

© This drawing is the property of Avant Tecno Oy.

© This drawing is the property of Avant Tecno Oy.

A444556 MIDDLE BOOM ASSEMBLY LEGUAN 220

REF	PART NO	QTY	DESCRIPTION	NOTES	PAGE
1	A444557	1	MIDDLE BOOM LEGUAN 220		-
2	A445153	1	ALUMINIUM CHANNEL OUTER ASSEMBLY LEGUAN		114
3	A444559	1	BRACKET, WEAR PAD UPPER		-
4	A444558	1	BRACKET, WEAR PAD LOWER		-
5	A421782	2	PULLEY, MIDDLE BOOM L190		-
6	A421763	2	PULLEY, MIDDLE BOOM L190		-
7	A421791	1	PIN, PULLEY MIDDLE BOOM L190		-
8	A421771	4	TIGHTENING BOLT MIDDLE BOOM L190		-
9	A444560	1	WEAR PAD REAR UP MIDDLE BOOM LEGUAN 220		-
10	A444547	2	WEAR PAD REAR LOWER MIDDLE BOOM LEGUAN		-
11	A421769	2	WEAR PAD FRONT DOWN MIDDLE BOOM L190		-
12	A445156	1	WEAR PAD FRONT UP MIDDLE BOOM LEGUAN 220		-
13	A421773	4	WEAR PAD SIDE, MIDDLE BOOM L190		-
14	A48986	4	SLIDE BEARING		-
15	A421783	2	SPACER S=7 MIDDLE BOOM		-
16	A422853	4	RUBBER PAD TELESCOPIC BOOM L190		-
17	A48988	4	ADJUSTMENT PLATE		-
18	66521	2	SLIDE BEARING F23/F20-15		-
19	65837	2	SLIDE BEARING BRM-80 F28/F25-25		-
20	72799	1	GREASE NIPPLE M6		-
21	A454178	4	WASHER M20 PA		-
22	A452810	2	PIVOT PIN, F=20 L=34		-
23	74851	2	SEEGER RING A20*1,2 DIN 471		-
24	74932	2	HEXAGONAL HEAD SCREW M8*12		-
25	73122	8	WASHER M8 A8,4 DIN 125 ZN		-
26	75000	2	HEXAGONAL SCREW M8*10 DIN 933		-
27	A457766	2	HEXAGONAL SCREW M10*16 FLANGE		-
28	A421818	1	PIN F30		-
29	73398	2	GREASE NIPPLE M6*1 90°		-
30	A454189	1	WIPER, MIDDLE BOOM		-
31	A454190	1	MOUNTING PLATE, WIPER MIDDLE BOOM		-
32	73326	1	SEEGER RING A25*1,2		-
33	A429197	2	HEXAGONAL SERRATED SCREW M8*12 W. FLANGE		-
34	A429653	8	HEXAGONAL HEAD SCREW M6*12 DIN 912 2 8.8		-
35	71680	8	WASHER M6 DIN 125		-
36	A445146	4	HEX. HEAD SCREW M8*20 DIN 7984		-
37	72052	4	COUNTERSUNK SOCKET HEAD SCREW M8*20 DIN		-
38	A445145	4	HEXAGONAL HEAD SCREW M8*16 DIN 7984		-
39	72320	8	HEXAGONAL NUT M8 NYLOC DIN 985		-

© This drawing is the property of Avant Tecno Oy.

© This drawing is the property of Avant Tecno Oy.

A445153 ALUMINIUM CHANNEL OUTER ASSEMBLY LEGUAN

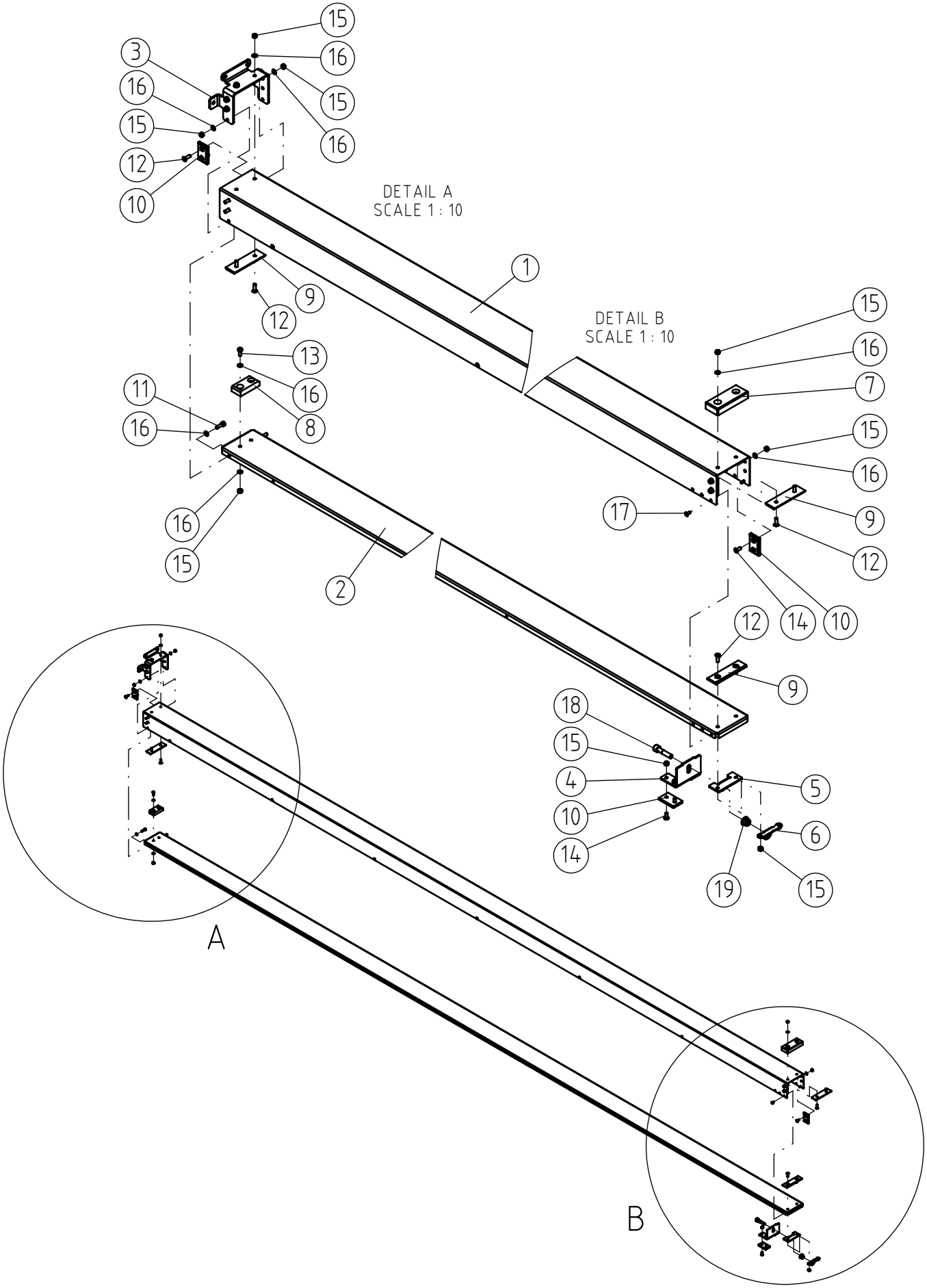

© This drawing is the property of Avant Tecno Oy.

© This drawing is the property of Avant Tecno Oy.

A445153 ALUMINIUM CHANNEL OUTER ASSEMBLY LEGUAN

REF	PART NO	QTY	DESCRIPTION	NOTES	PAGE
1	A445154	1	ALUMINIUM CHANNEL U-PROFILE LEGUAN 220		-
2	A445155	1	BOTTOM, OUTER CHUTE		-
3	A444741	1	MOUNTING BRACKET, OUTER CHUTE		-
4	A445976	1	MOUNTING BRACKET, WEAR PAD		-
5	A445975	1	MOUNTING BRACKET, OUTER CHUTE		-
6	A446833	1	LOCKING PLATE, OUTER CHUTE		-
7	A453694	1	WEAR PAD, CABLE CHUTE		-
8	A444189	1	WEAR PAD ALUMINIUM CHANNEL LEGUAN 220		-
9	A444757	3	WEAR PAD ALUMINIUM CHANNEL LEGUAN 220		-
10	A421927	6	WEAR PAD REAR LOWER , CABLE CARRIER L190		-
11	74472	2	HEXAGONAL HEAD SCREW M 5*16 DIN 912 ZN		-
12	A445144	10	COUNTERSUNK HEAD SCREW M5*16 DIN 7991		-
13	A444756	2	HEX. HEAD SCREW M5*12 DIN 7984		-
14	75148	8	COUNTERSUNK HEAD SCREW M5*12 DIN 7991		-
15	72315	22	NUT M5 NYLOC DIN 985		-
16	74448	20	WASHER M5 A5,3 DIN 125 ZN		-
17	A445150	14	BLIND RIVET 4,0*8		-
18	74482	1	HEXAGONAL HEAD SCREW M8* 35 DIN 912		-
19	A447717	1	HEXAGONAL NUT M8 NYLOC DIN 6926		-

© This drawing is the property of Avant Tecno Oy.

© This drawing is the property of Avant Tecno Oy.

A444541 TELESCOPIC BOOM ASSEMBLY LEGUAN 220

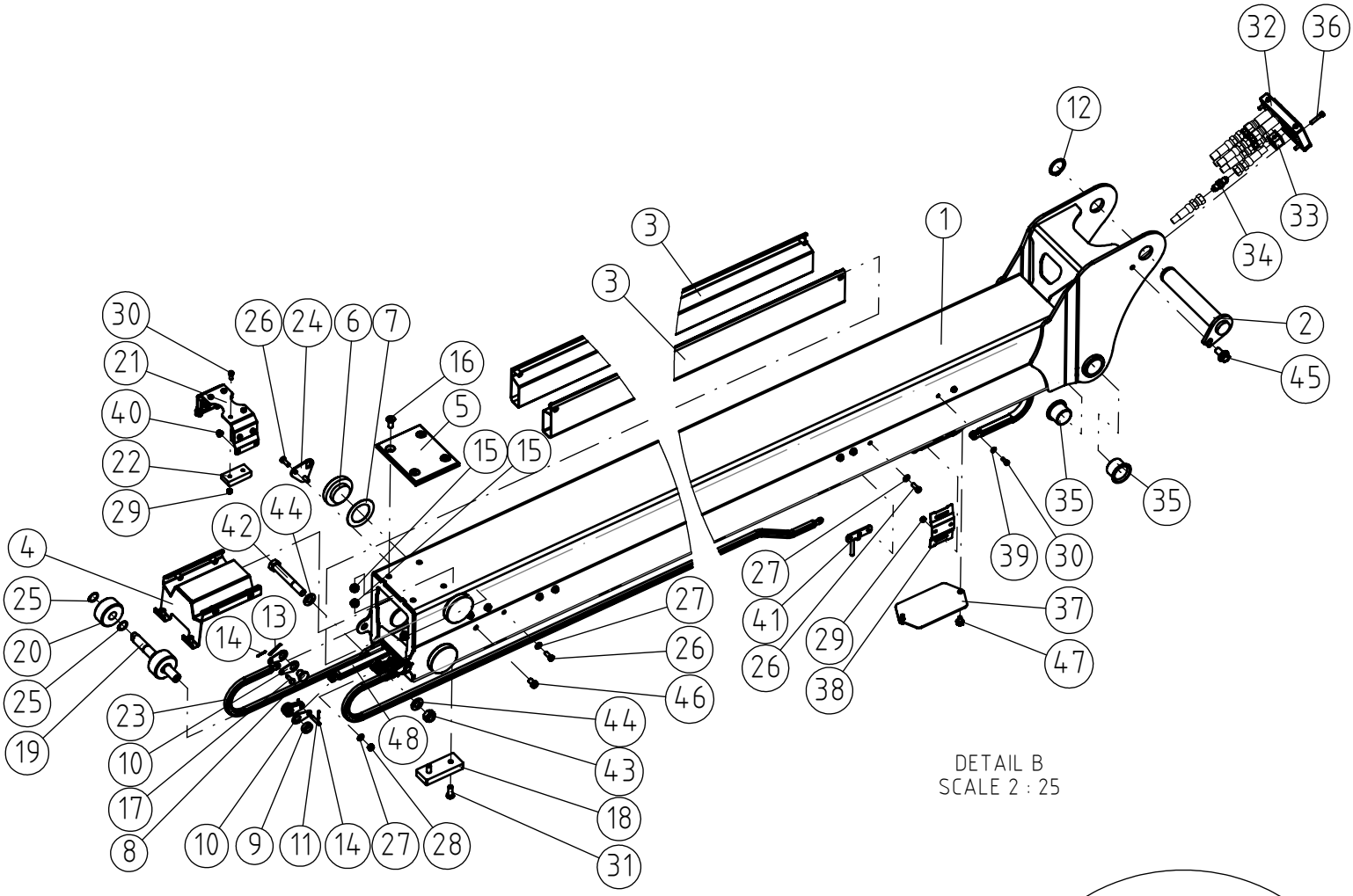

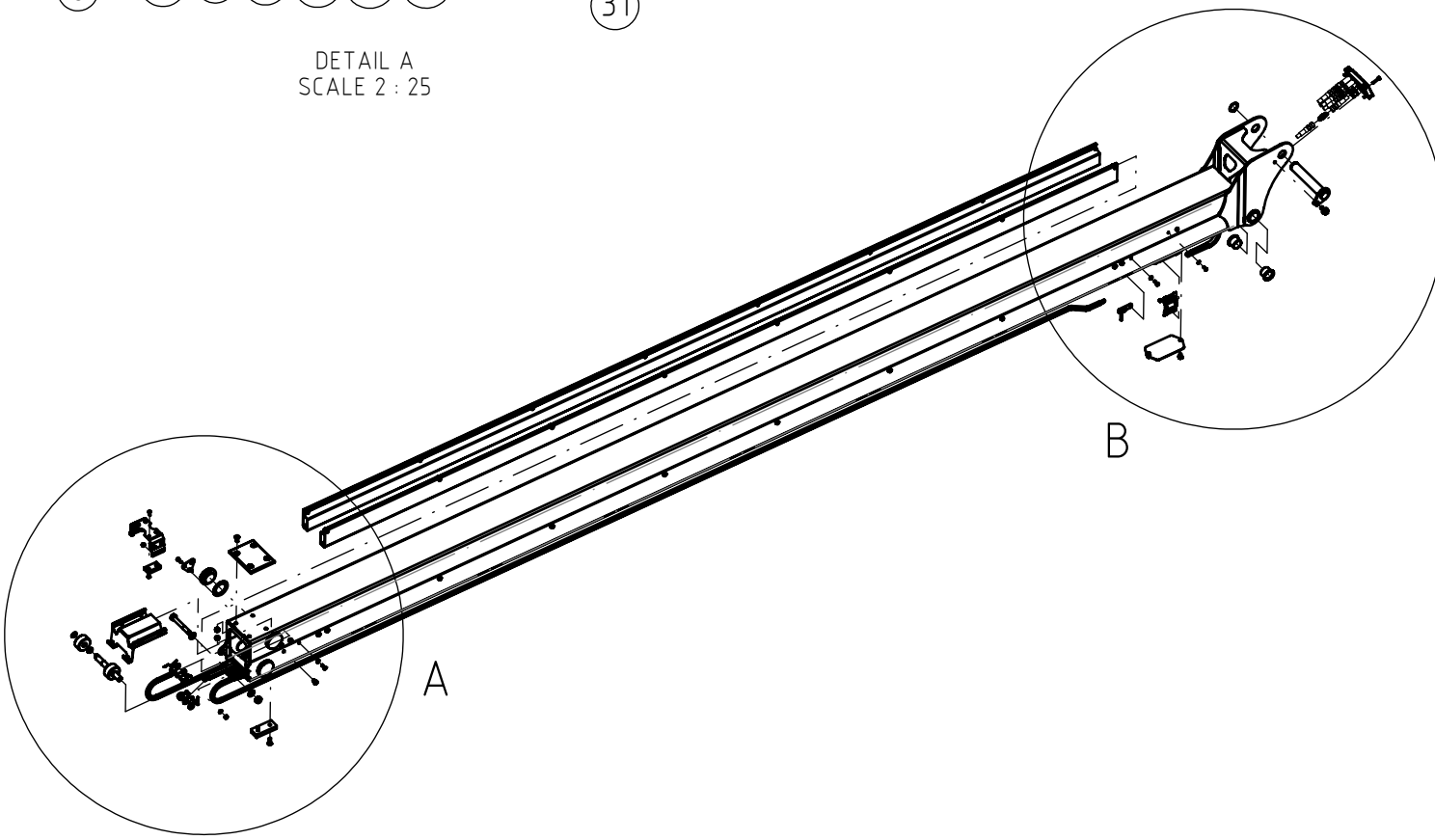

© This drawing is the property of Avant Tecno Oy.

© This drawing is the property of Avant Tecno Oy.

A444541 TELESCOPIC BOOM ASSEMBLY LEGUAN 220

REF	PART NO	QTY	DESCRIPTION	NOTES	PAGE
1	A444542	1	TELESCOPIC BOOM LEGUAN 220		-
2	A48975	1	PIN		-
3	A445175	2	CABLE CHUTE, INNER BOOM		-
4	A446719	1	HOSE COVER, INNER BOOM		-
5	A444548	1	WEAR PAD REAR UP TELESCOPIC BOOM LEGUAN		-
6	A48986	4	SLIDE BEARING		-
7	A48988	4	ADJUSTMENT PLATE		-
8	A421869	2	LOCKING PIN CHAIN L190		-
9	A421878	4	SPACER TELESCOPE L190		-
10	66473	12	END LINK, LEAF CHAIN		-
11	66474	2	CLEVIS PIN F5,08-32, LEAF CHAIN		-
12	74409	1	SEEGER RING A30*1,5 DIN 471		-
13	75154	2	COTTER PIN 2.5*25 DIN 94		-
14	75153	6	COTTER PIN 1.6*16 DIN 94		-
15	72320	8	HEXAGONAL NUT M8 NYLOC DIN 985		-
16	72052	4	COUNTERSUNK SOCKET HEAD SCREW M8*20 DIN		-
17	A444499	2	AXLE, LEAF CHAIN		-
18	A444547	2	WEAR PAD REAR LOWER MIDDLE BOOM LEGUAN		-
19	A444252	1	AXLE, CABLE CARRIER CHAIN		-
20	A421841	2	ROLLER, CABLE CARRIER CHAIN L190		-
21	A445141	1	MOUNTING BRACKET, WEAR PAD		-
22	A444189	4	WEAR PAD ALUMINIUM CHANNEL LEGUAN 220		-
23	A445169	2	LEAF CHAIN 2X2 TELESCOPE LEGUAN 220		-
24	A445142	1	LOCKING PLATE, AXLE		-
25	74812	4	SEEGER RING A 16*1,0		-
26	A445243	28	HEX. HEAD SCREW M6*16 DIN 7984		-
27	71680	28	WASHER M6 DIN 125		-
28	72318	2	HEXAGONAL NUT M 6 DIN 985 NYLOC		-
29	72315	12	NUT M5 NYLOC DIN 985		-
30	A444756	12	HEX. HEAD SCREW M5*12 DIN 7984		-
31	A445146	4	HEX. HEAD SCREW M8*20 DIN 7984		-
32	75012	1	CABLE ENTRY FRAME KEL-ER 16/8		-
33	75019	8	CABLE GROMMET F10-F11 BLACK KT10		-
34	A436013	5	CONNECTOR FITTING UNF 7/16" JIC UK		-
35	66189	4	SLIDE BEARING F34/F30-26		-
36	75095	4	HEXAGONAL HEAD SCREW M5*25 DIN912 2		-
37	A445304	1	COVER PLATE, INNER BOOM		-
38	A446300	2	MOUNTING BRACKET, CABLES, INNER BOOM		-
39	74448	4	WASHER M5 A5,3 DIN 125 ZN		-
40	A447716	4	HEXAGONAL NUT M5 NYLOC DIN 6926		-
41	A453676	2	HOSE GUIDE, INNER BOOM		-
42	74491	1	HEXAGONAL SCREW M12*90		-
43	72324	1	HEXAGONAL NUT M 12 NYLOC DIN 985		-
44	71691	2	WASHER M12 A13 DIN 125		-
45	A432196	1	HEXAGONAL SERRATED SCREW M10*20 W. FLANG		-
46	A445323	1	HEXAGONAL HEAD SCREW M8*12 DIN 7984		-
47	A431969	2	HEXAGONAL SERRATED SCREW M6*10 W. FLANG		-
48	A445168	2	LEAF CHAIN 4X4 TELESCOPE LEGUAN 220		-

© This drawing is the property of Avant Tecno Oy.

© This drawing is the property of Avant Tecno Oy.

A445220 TELESCOPIC CYLINDER ASSEMBLY LEGUAN 220

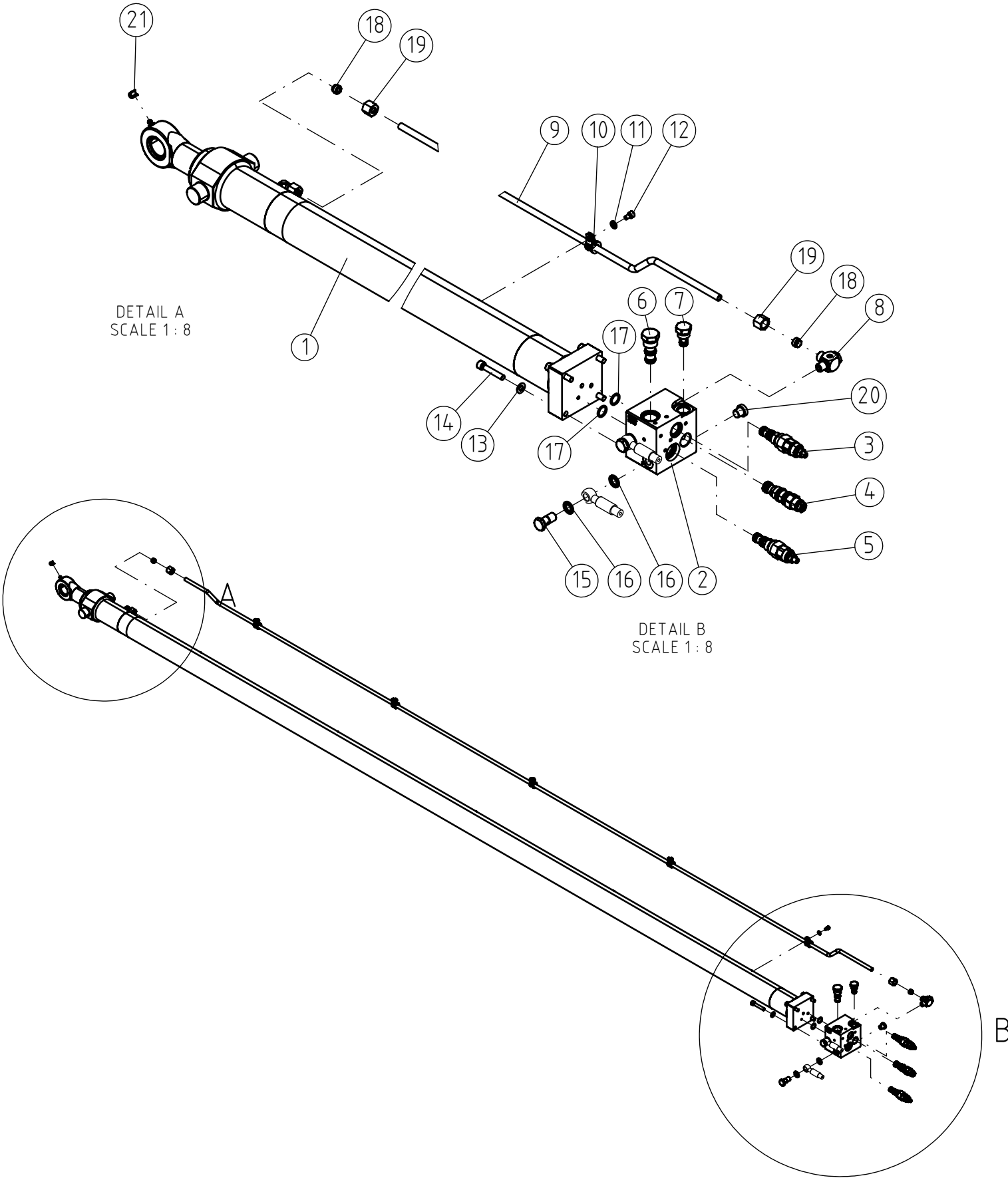

© This drawing is the property of Avant Tecno Oy.

© This drawing is the property of Avant Tecno Oy.

A445220 TELESCOPIC CYLINDER ASSEMBLY LEGUAN 220

REF	PART NO	QTY	DESCRIPTION	NOTES	PAGE
1	A453224	1	HYDRAULIC CYLINDER 63/45(30)-3000		-
1.1	A458392	1	SEAL KIT HYDR. CYL. 63/45		-
2	A446370	1	SUBPLATE TELE. CYLINDER		-
3	A447426	1	LOAD CONTROL VALVE VBST-08AA		-
4	A434782	1	VALVE CARTRIDGE LOAD CONTROL VALVE	A434782 Install torque 45 Nm	-
4.1	A443090	1	SEAL KIT VALVE CARTRIDGE T-11A		-
5	A457197	1	COUNTERBALANCE VALVE ADJUSTED		-
6	66040	1	LOAD SHUTTLE VALVE CARTRIDGE LS10-30-		-
6.1	A443087	1	SEAL KIT VALVE CARTRIDGE SK10-3N-MM		-
7	A428554	1	CHECK VALVE CARTRIDGE, POPPET TYPE	A428554 Install torque 26 Nm	-
7.1	A443082	1	SEAL KIT VALVE CARTRIDGE		-
8	66367	1	BANJO ELBOW FITTING R1/4"UK - 10MM		-
9	A446424	1	HYDRAULIC PIPE, TELE. CYL.		-
10	74570	5	PIPE CLAMP F11 MM		-
11	71680	5	WASHER M6 DIN 125		-
12	75089	5	HEXAGONAL HEAD SCREW M6*10 DIN912 2		-
13	73122	4	WASHER M8 A8,4 DIN 125 ZN		-
14	74483	4	HEXAGONAL HEAD SCREW M8* 45 DIN 912		-
15	64557	2	BANJO BOLT R 1/4"		-
16	73757	4	USIT COMPRESSION R1/4"		-
17	74738	2	O-RING NBR F 15 * 2,50 72SH		-
18	A451988	2	CUTTING RING		-
19	66365	2	FITTING NUT "M NUT" M10L M16*1,5		-
20	64700	1	HEXAGONAL PLUG R 1/4"		-
21	A456064	1	CAP, GREASE NIPPLE		-

© This drawing is the property of Avant Tecno Oy.

© This drawing is the property of Avant Tecno Oy.

A445143 HYDR. CYLINDER UPPER BOOM WITH VALVES

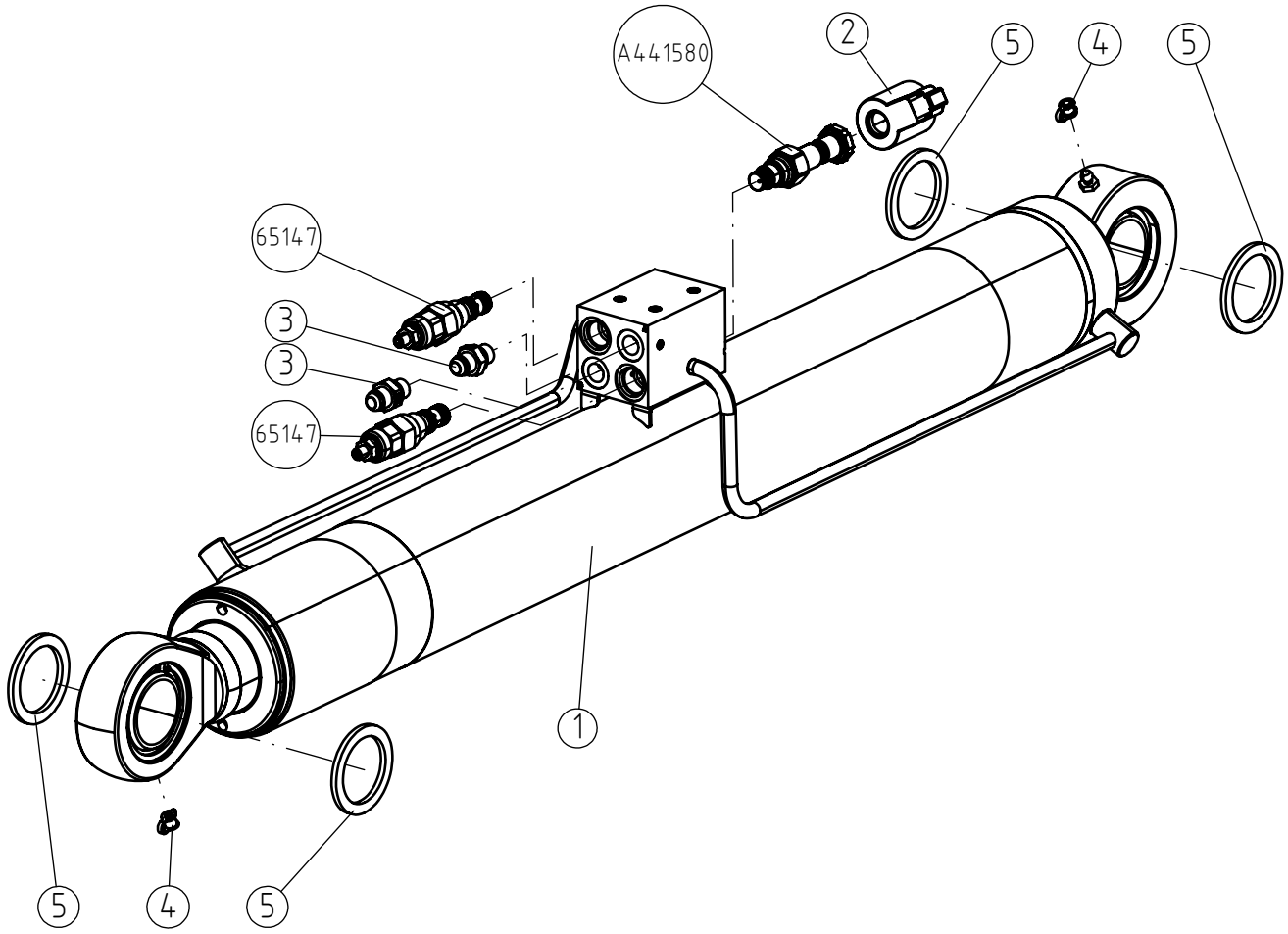

© This drawing is the property of Avant Tecno Oy.

© This drawing is the property of Avant Tecno Oy.

A445143 HYDR. CYLINDER UPPER BOOM WITH VALVES

REF	PART NO	QTY	DESCRIPTION	NOTES	PAGE
1	A445822	1	HYDR. CYLINDER ASSEMBLY, UPPER BOOM		-
1.1	A422148	1	SEAL KIT, HYDR. CYLINDER 90/63 NORRHYD		-
2	A441592	1	SOLENOID 12VDC / 20W DEUTSCH CONNECTOR		-
3	64059	2	BASIC FITTING F40XS10-1/4		-
4	A456064	2	CAP, GREASE NIPPLE		-
5	A418134	4	SPACER D63*D45X3 LEGUAN		-

© This drawing is the property of Avant Tecno Oy.

© This drawing is the property of Avant Tecno Oy.

A444533 JIB BOOM ASSEMBLY LEGUAN 220

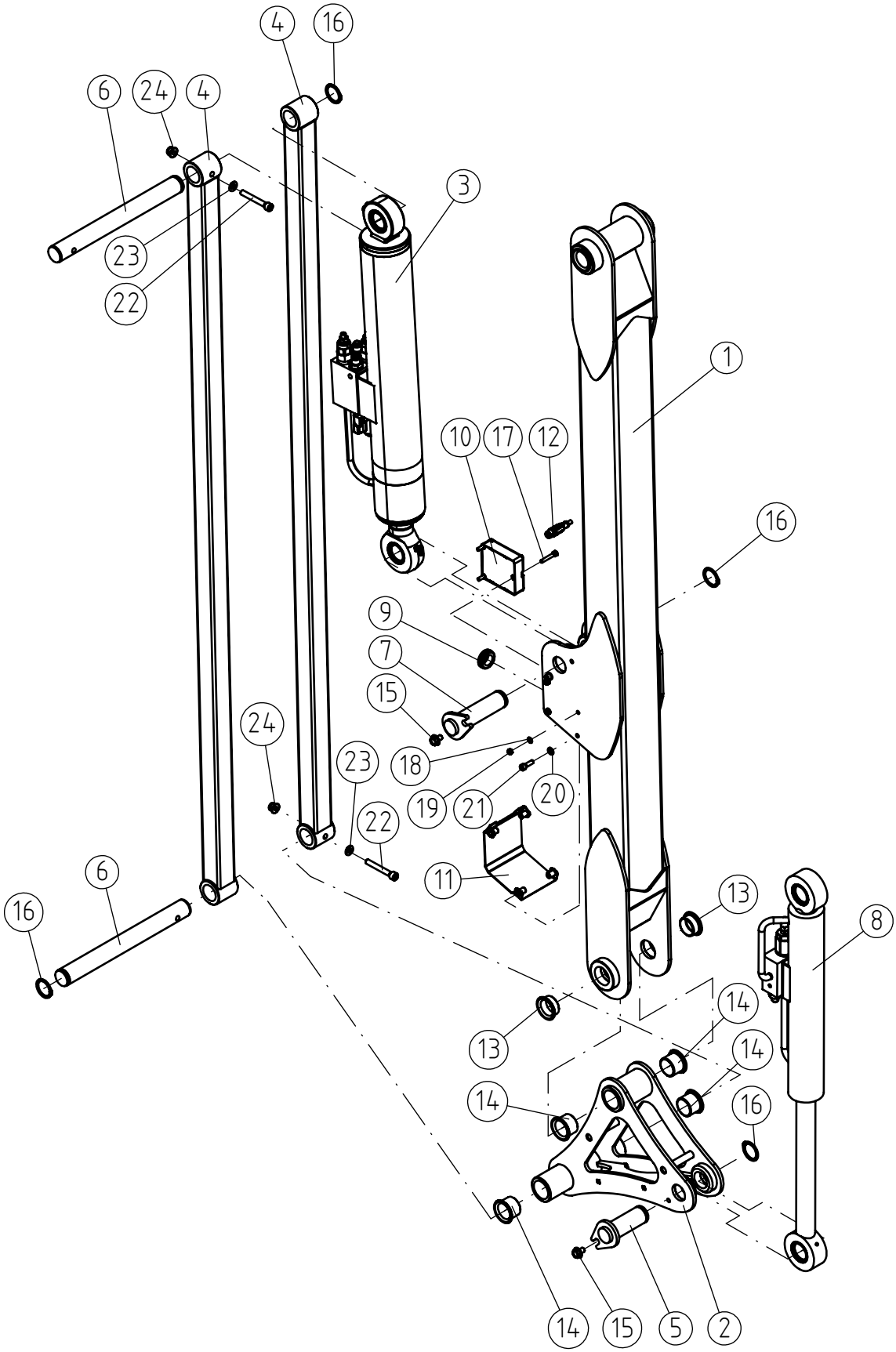

© This drawing is the property of Avant Tecno Oy.

© This drawing is the property of Avant Tecno Oy.

A444533 JIB BOOM ASSEMBLY LEGUAN 220

REF	PART NO	QTY	DESCRIPTION	NOTES	PAGE
1	A444536	1	JIB BOOM LEGUAN 220		-
2	A36620	1	KNUCKLE PIECE LEGUAN 160M2		-
3	A447276	1	HYDR. CYLINDER ASSEMBLY, JIB		124
4	A446093	2	SELF LEVELLING BAR, JIB		-
5	A419411	1	PIVOT PIN F30 L=74		-
6	A447561	2	PIVOT PIN F=30 L=295		-
7	A454049	1	PIVOT PIN F=30 L=105		-
8	A419594	1	HYDR. CYLINDER WITH CHECK VALVES SELF LE		126
9	A434302	1	GROMMET F32/25/19 60SH		-
10	A457909	1	SLOPE SENSOR, JIB LEGUAN 220		-
11	A447332	1	COVER PLATE, SLOPE SENSOR JIB		-
12	66136	1	TERMINATION RESISTOR CAN OPEN		-
13	66188	2	SLIDE BEARING F34/F30-16		-
14	66189	6	SLIDE BEARING F34/F30-26		-
15	A429197	2	HEXAGONAL SERRATED SCREW M8*12 W. FLANGE		-
16	74409	4	SEEGER RING A30*1,5 DIN 471		-
17	74694	3	HEXAGONAL SCREW M5*30 DIN 912		-
18	74448	3	WASHER M5 A5,3 DIN 125 ZN		-
19	72315	3	NUT M5 NYLOC DIN 985		-
20	71680	4	WASHER M6 DIN 125		-
21	74475	4	HEXAGON. HEAD SCREW M 6* 20 DIN 912 ZN		-
22	74484	2	HEXAGONAL HEAD SCREW M8* 60 DIN 912		-
23	73122	2	WASHER M8 A8,4 DIN 125 ZN		-
24	A447717	2	HEXAGONAL NUT M8 NYLOC DIN 6926		-

© This drawing is the property of Avant Tecno Oy.

© This drawing is the property of Avant Tecno Oy.

A447276 HYDR. CYLINDER ASSEMBLY, JIB

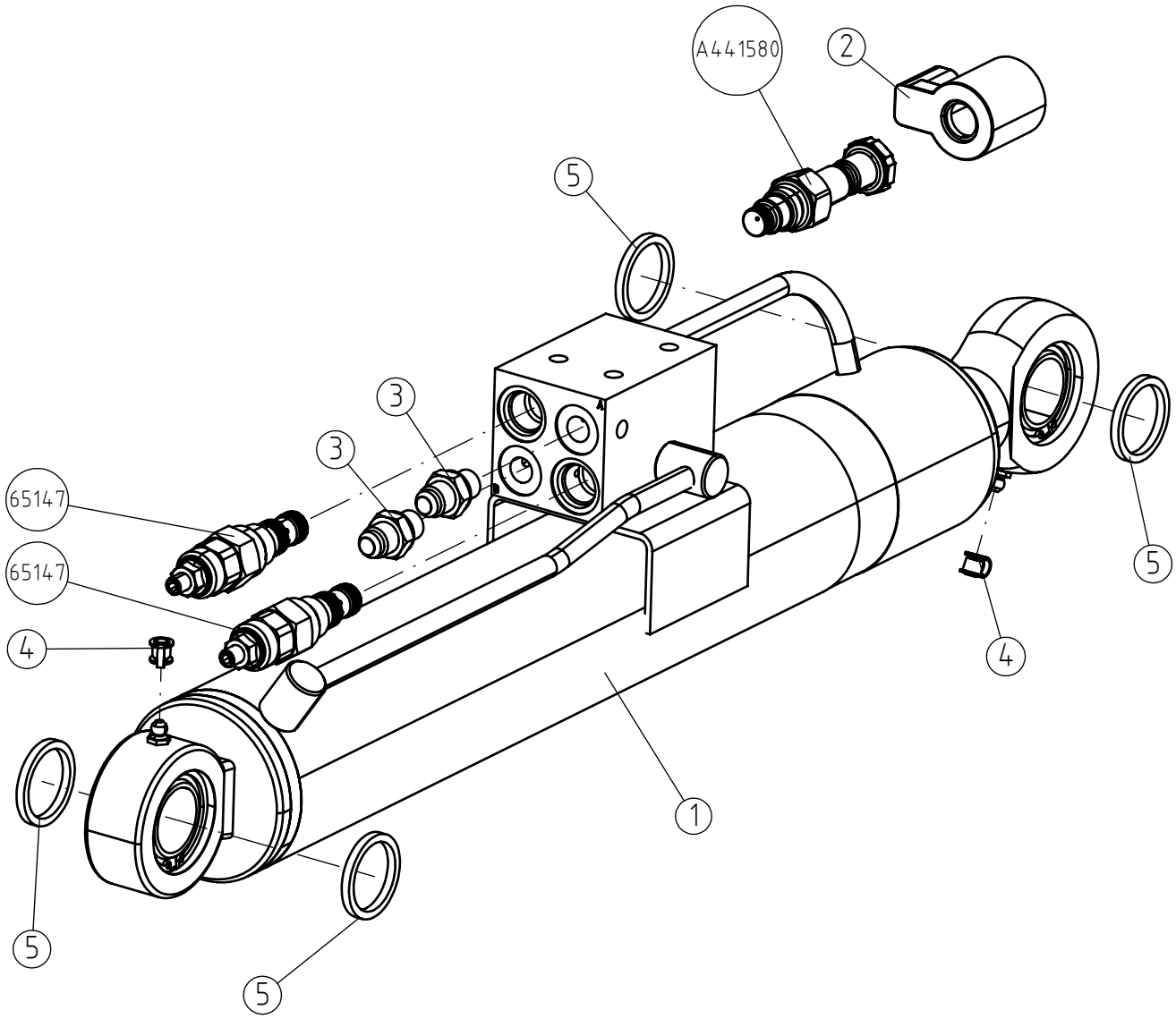

© This drawing is the property of Avant Tecno Oy.

© This drawing is the property of Avant Tecno Oy.

A447276 HYDR. CYLINDER ASSEMBLY, JIB

REF	PART NO	QTY	DESCRIPTION	NOTES	PAGE
1	A447274	1	HYDR. CYLINDER, JIB		-
1.1	A420076	1	SEAL KIT, HYDR. CYLINDER 70/40 NORRHYD		-
2	A441592	1	SOLENOID 12VDC / 20W DEUTSCH CONNECTOR		-
3	64059	2	BASIC FITTING F40XS10-1/4		-
4	A456064	2	CAP, GREASE NIPPLE		-
5	A418133	4	SPACER D45D30X3 LEGUAN		-

© This drawing is the property of Avant Tecno Oy.

© This drawing is the property of Avant Tecno Oy.

A419594 HYDR. CYLINDER WITH CHECK VALVES SELF LE

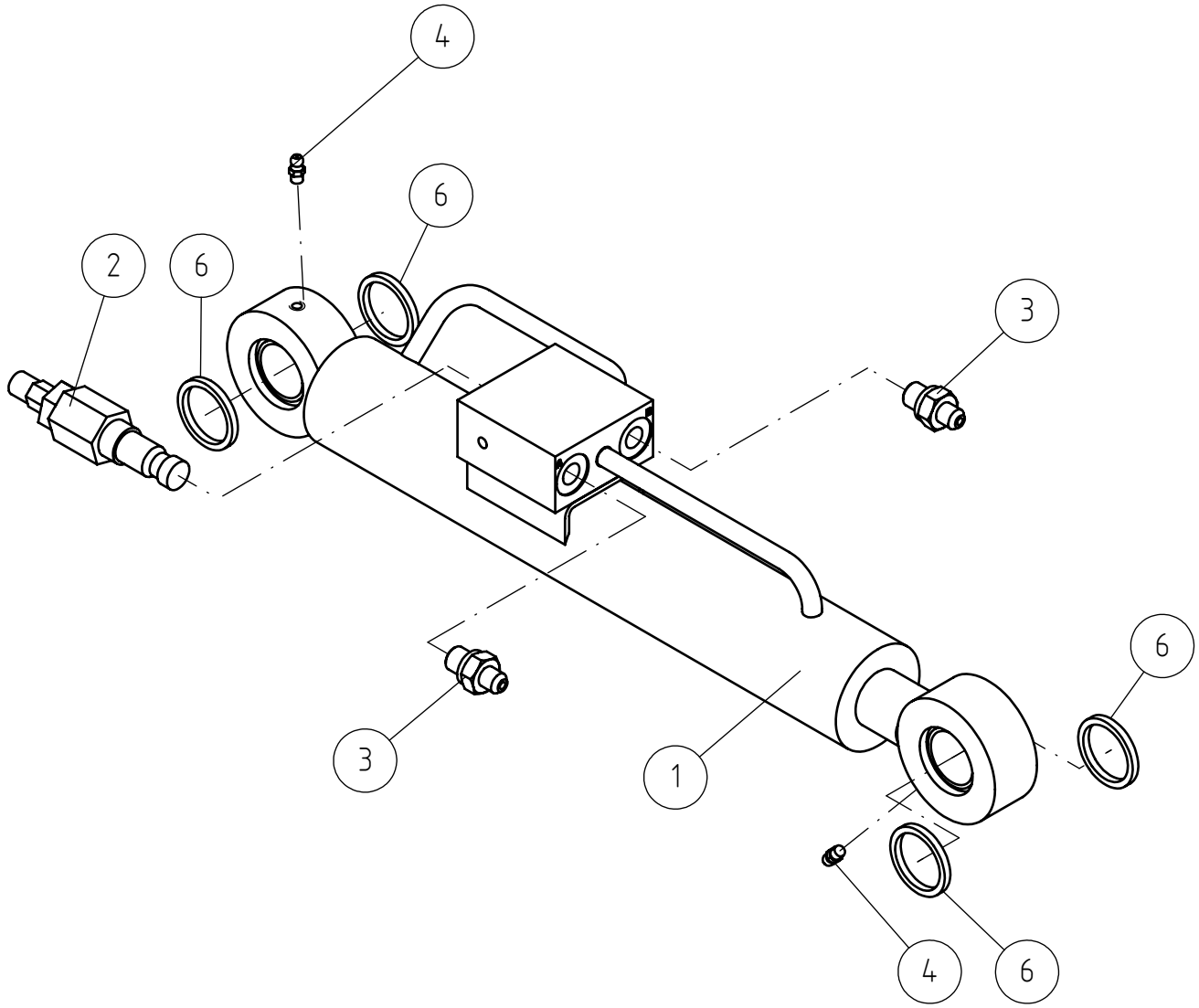

© This drawing is the property of Avant Tecno Oy.

© This drawing is the property of Avant Tecno Oy.

A419594 HYDR. CYLINDER WITH CHECK VALVES SELF LE

REF	PART NO	QTY	DESCRIPTION	NOTES	PAGE
1	A36657	1	HYDRAULIC CYLINDER 50/32-280 LEGUAN		-
2	64736	1	VALVE CARTRIDGE CA-10-	64736 Install torque 50 Nm	-
2.1	A443651	1	SEAL KIT LOAD CONTROL VALVE WALVOIL CA10		-
3	64678	2	BASIC FITTING F40XS6-1/4"		-
4	72799	2	GREASE NIPPLE M6		-
5	A420077	1	SEAL KIT, HYDR. CYLINDER 50/32 NORRHYD		-
6	A418133	4	SPACER D45D30X3 LEGUAN		-

© This drawing is the property of Avant Tecno Oy.

© This drawing is the property of Avant Tecno Oy.

A444544 PLATFORM+SELF LEVELLING PIECE ASSEMBLY

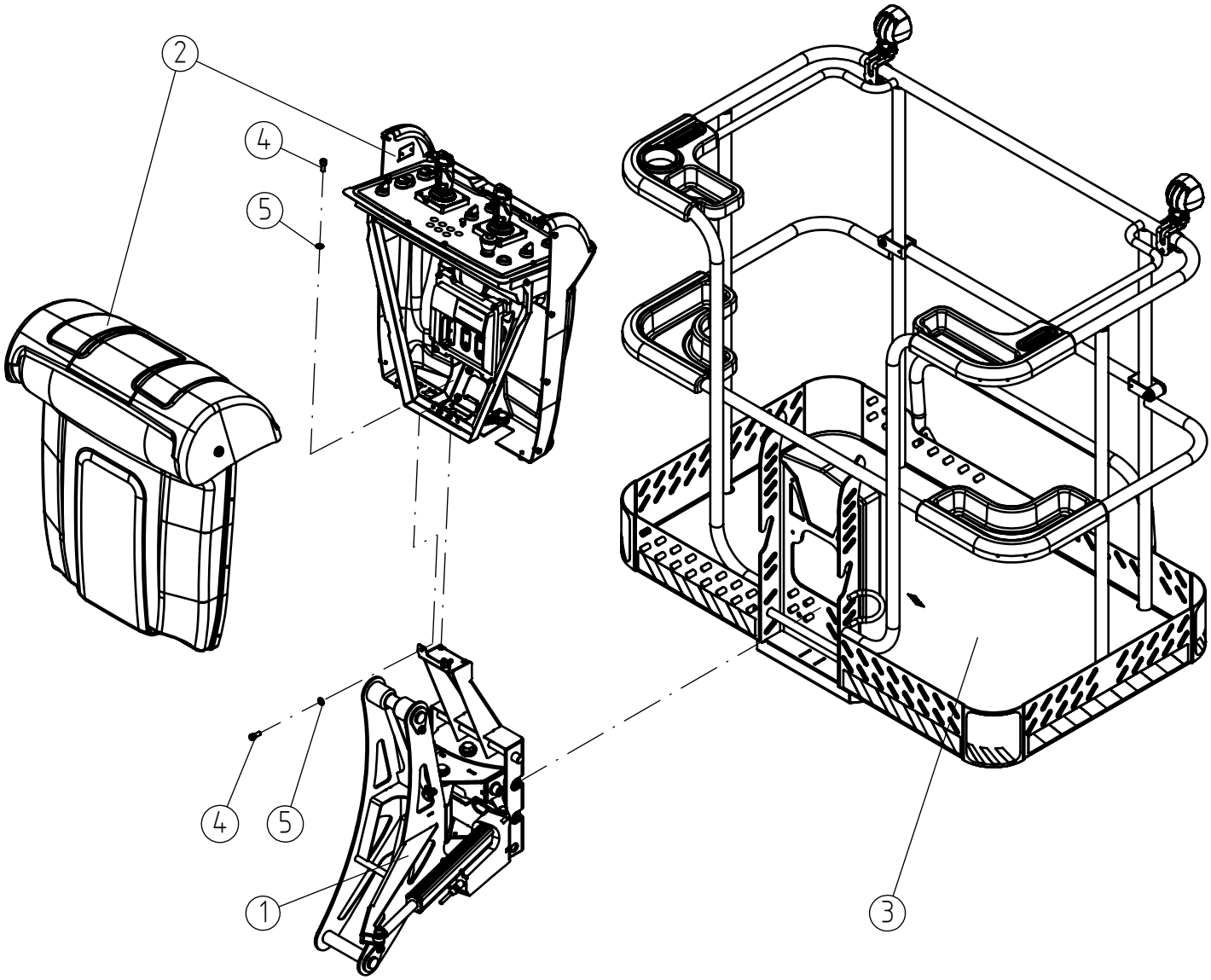

© This drawing is the property of Avant Tecno Oy.

© This drawing is the property of Avant Tecno Oy.

A444544 PLATFORM+SELF LEVELLING PIECE ASSEMBLY

REF	PART NO	QTY	DESCRIPTION	NOTES	PAGE
1	A447344	1	ROTATION PLATFORM ASSEMBLY LEGUAN 220		130
2	A449211	1	CONTROL PANEL PLATFORM ASSEMBLY		134
3	A453723	1	WORK PLATFORM ACCESSORIES		140
4	74481	4	HEXAGONAL HEAD SCREW M8*20 DIN 912 ZN		-
5	73122	4	WASHER M8 A8,4 DIN 125 ZN		-

© This drawing is the property of Avant Tecno Oy.

© This drawing is the property of Avant Tecno Oy.

A447344 ROTATION PLATFORM ASSEMBLY LEGUAN 220

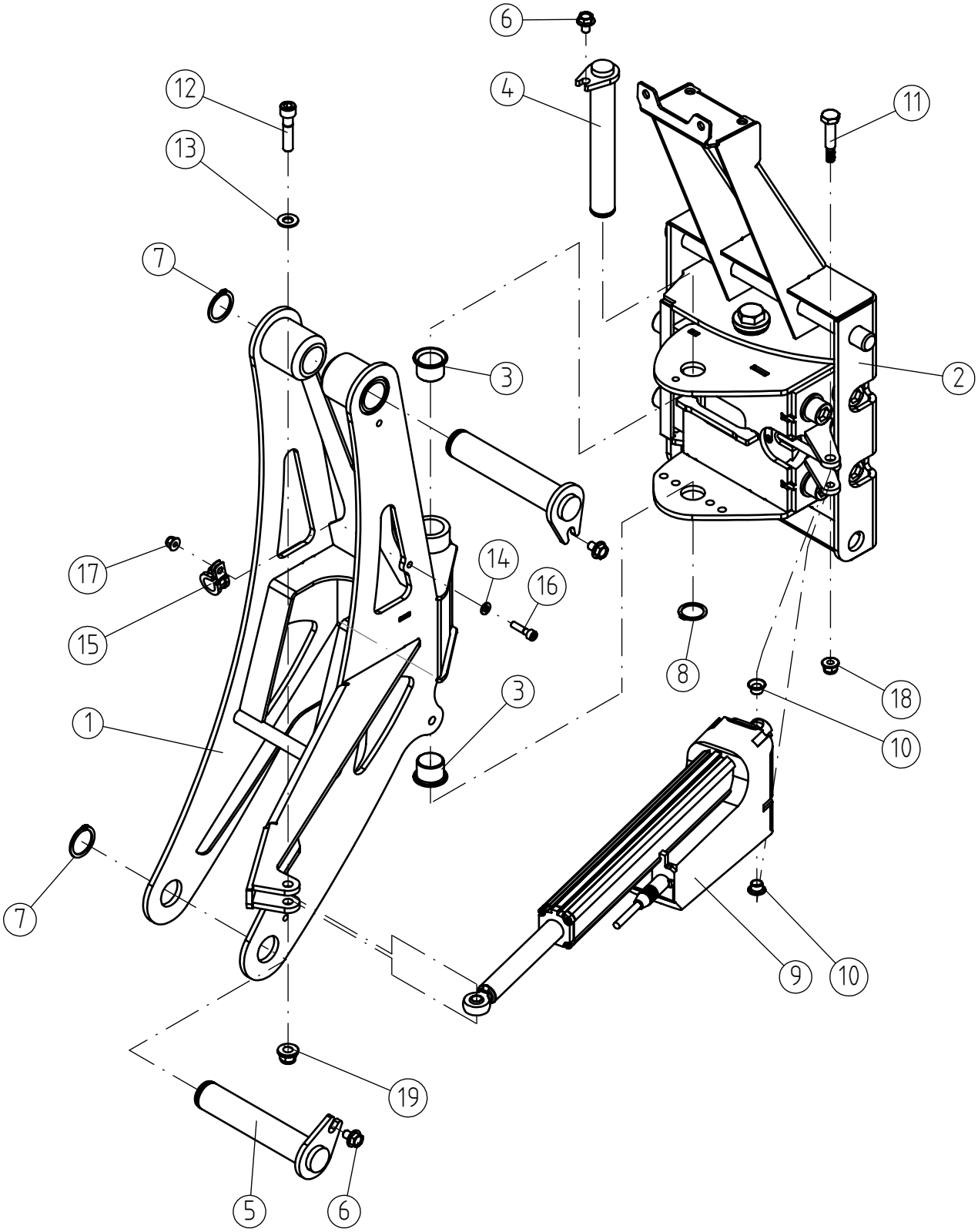

© This drawing is the property of Avant Tecno Oy.

© This drawing is the property of Avant Tecno Oy.

A447344 ROTATION PLATFORM ASSEMBLY LEGUAN 220

REF	PART NO	QTY	DESCRIPTION	NOTES	PAGE
1	A447357	1	KNUCKLE PIECE PLATFORM SELF LEVELLING		-
2	A447345	1	MOUNTING BRACKET PLATFORM ASSEMBLY		132
3	66187	2	SLIDE BEARING F28/F25-21,5		-
4	A417543	1	PIVOT PIN D25X183		-
5	A419337	2	PIVOT PIN F30 L=148		-
6	A429197	3	HEXAGONAL SERRATED SCREW M8*12 W. FLANGE		-
7	74409	2	SEEGER RING A30*1,5 DIN 471		-
8	73326	1	SEEGER RING A25*1,2		-
9	A449074	1	LINEAR MOTOR, PLATFORM ROTATION		-
10	A447259	2	SLIDE BEARING, F12/F10		-
11	A447358	1	PIN, LINEAR MOTOR		-
12	A453083	1	HEXAGONAL HEAD SCREW M10*45 DIN 912		-
13	73121	1	WASHER M10 A10,5 DIN 125 ZN		-
14	71680	1	WASHER M6 DIN 125		-
15	74571	1	PIPE CLAMP F16 MM		-
16	71880	1	HEXAGONAL HEAD SCREW M 6*25 DIN 912 2		-
17	A450669	1	NUT M6 NYLOC DIN 6926		-
18	A447717	1	HEXAGONAL NUT M8 NYLOC DIN 6926		-
19	A453721	1	HEXAGONAL NUT M10 NYLOC DIN 6923		-

© This drawing is the property of Avant Tecno Oy.

© This drawing is the property of Avant Tecno Oy.

A447345 MOUNTING BRACKET PLATFORM ASSEMBLY

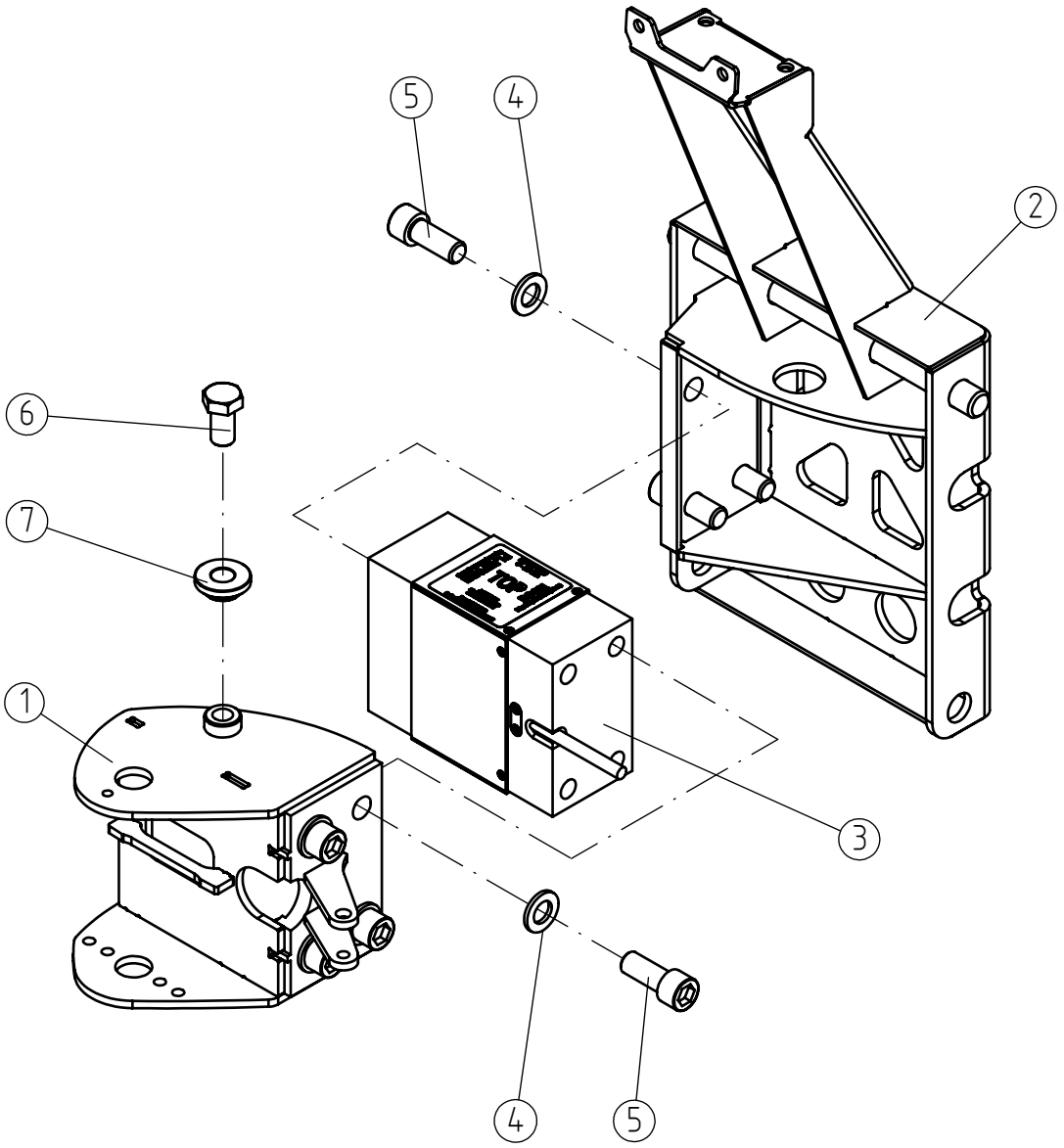

© This drawing is the property of Avant Tecno Oy.

© This drawing is the property of Avant Tecno Oy.

A447345 MOUNTING BRACKET PLATFORM ASSEMBLY

REF	PART NO	QTY	DESCRIPTION	NOTES	PAGE
1	A447353	1	PIVOT PIECE, PLATFORM ROTATION		-
2	A449168	1	MOUNTING BRACKET PLATFORM LEGUAN 220		-
3	66033	1	LOAD CELL MOBA 0-500 KG	66033 Fixing bolts install torque 150 Nm	-
4	A430193	8	WASHER M16 A17 DIN 125		-
5	75004	8	HEXAGONAL HEAD SCREW M16*1,5-40		-
6	72232	1	HEXAGONAL SCREW M16*30 DIN 933		-
7	A453698	1	SECURING SLEEVE, LOAD CELL		-

© This drawing is the property of Avant Tecno Oy.

© This drawing is the property of Avant Tecno Oy.

A449211 CONTROL PANEL PLATFORM ASSEMBLY

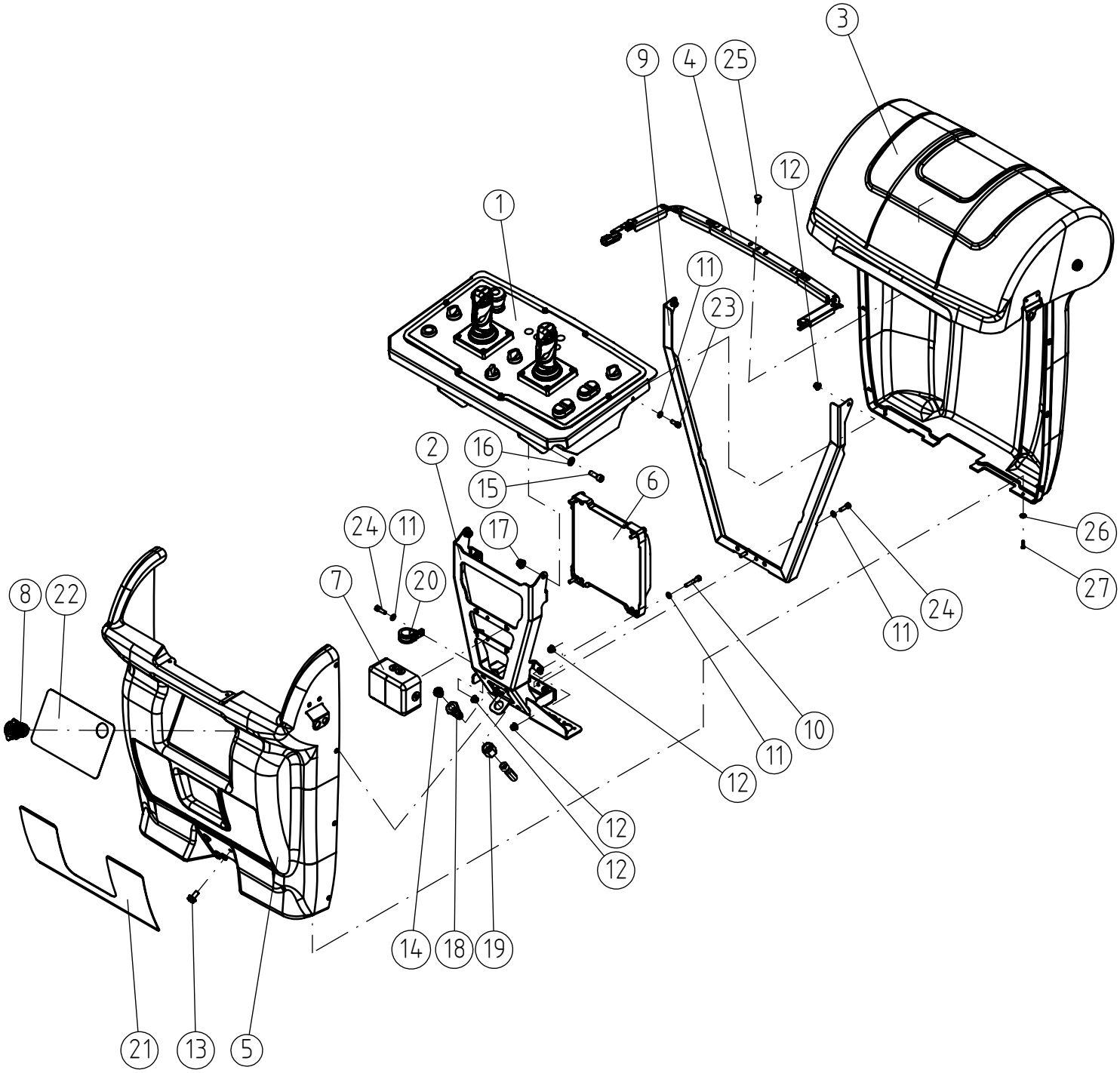

© This drawing is the property of Avant Tecno Oy.

© This drawing is the property of Avant Tecno Oy.

A449211 CONTROL PANEL PLATFORM ASSEMBLY

REF	PART NO	QTY	DESCRIPTION	NOTES	PAGE
1	A444822	1	CONTROLS ON PLATFORM LEGUAN 220		136
2	A449181	1	FRAME, CONTROL BOX, PLATFORM		-
3	A449385	1	COVER PANEL + LID, PLATFORM CONTROLS		-
4	A422089	1	LED LIGHT STRIP ON PLATFORM LEGUAN 165		-
5	A453809	1	COVER PANEL DASHBOARD PLATFORM LEGUAN		-
6	A444566	1	SAFETY CONTROLLER		-
6.1	A458371	1	ETHERNET CABLE, LOGIC CONTROLLER		-
7	66154	1	SOCKET GROUNDED 2-PART 250V/16A IP55		-
8	A454835	1	USB SOCKET		-
9	A431773	1	MOUNTING BRACKET CONTROL PANEL L135 NEO		-
10	A427068	4	HEXAGONAL HEAD SCREW M6*35 DIN 912 2		-
11	71680	9	WASHER M6 DIN 125		-
12	A450669	9	NUT M6 NYLOC DIN 6926		-
13	A429200	4	HEXAGONAL SERRATED SCREW M8*16 WITH FLAN		-
14	A454927	1	PLASTIC PLUG R1/4"		-
15	71884	2	HEXAGONAL HEAD SCREW M 8*25 DIN 912 2		-
16	73122	2	WASHER M8 A8,4 DIN 125 ZN		-
17	A447717	2	HEXAGONAL NUT M8 NYLOC DIN 6926		-
18	A449387	1	LEAD-THROUGH FITTING G1/4" SK - 9/16" -		-
19	64052	1	BINDING NUT BTXS12		-
20	74573	1	PIPE CLAMP F25 MM		-
21	A454792	1	DECAL PLATFORM		-
22	A454683	1	DECAL PLATFORM COVER		-
23	73766	2	HEXAGONAL HEAD SCREW M6*16 DIN 912 2 8.8		-
24	74475	3	HEXAGON. HEAD SCREW M 6* 20 DIN 912 ZN		-
25	A454169	5	BARBED FASTENER D12,7/D6 NYLON		-
26	A444610	10	CUP WASHER M4 DIN 17670 BRASS		-
27	A444594	10	CROSS HEAD COUNTERSUNK SCREW M4*16 DIN		-

© This drawing is the property of Avant Tecno Oy.

© This drawing is the property of Avant Tecno Oy.

A444822 CONTROLS ON PLATFORM LEGUAN 220

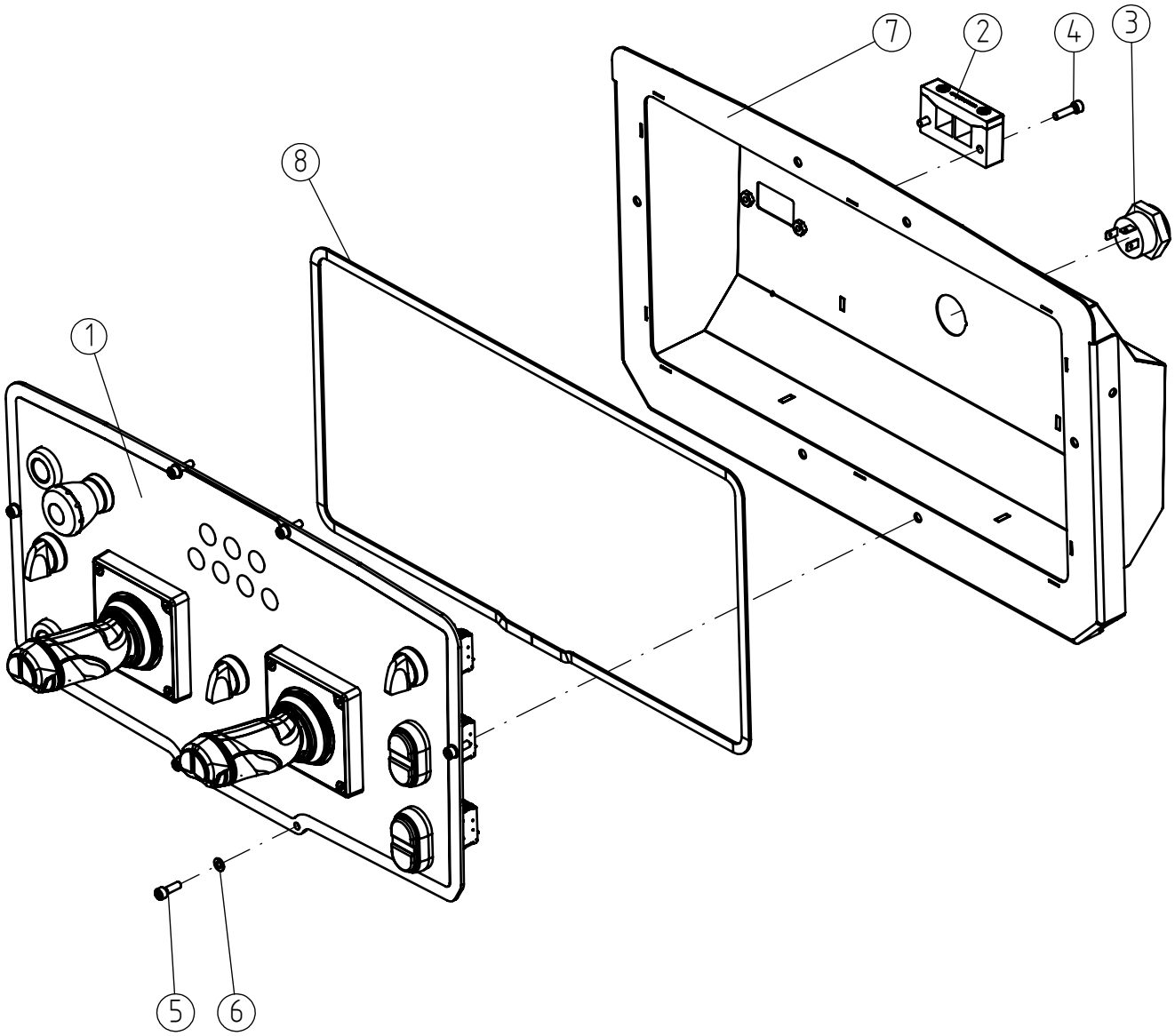

© This drawing is the property of Avant Tecno Oy.

© This drawing is the property of Avant Tecno Oy.

A444822 CONTROLS ON PLATFORM LEGUAN 220

REF	PART NO	QTY	DESCRIPTION	NOTES	PAGE
1	A444823	1	DASHBOARD PLATFORM ASSEMBLY LEGUAN 220		138
2	A451705	1	CABLE ENTRY FRAME		-
3	64955	1	ALARM BEEPER SONITRON SCI 535 A5 F2		-
4	75094	2	HEXAGONAL HEAD SCREW M5*20 DIN912 2		-
5	74472	6	HEXAGONAL HEAD SCREW M 5*16 DIN 912 ZN		-
6	74448	6	WASHER M5 A5,3 DIN 125 ZN		-
7	A444824	1	HOUSING, CONTROL PANEL		-
8	A453725	1	SEALING TAPE, CONTROL PANEL PLATFORM		-

© This drawing is the property of Avant Tecno Oy.

© This drawing is the property of Avant Tecno Oy.

A444823 DASHBOARD PLATFORM ASSEMBLY LEGUAN 220

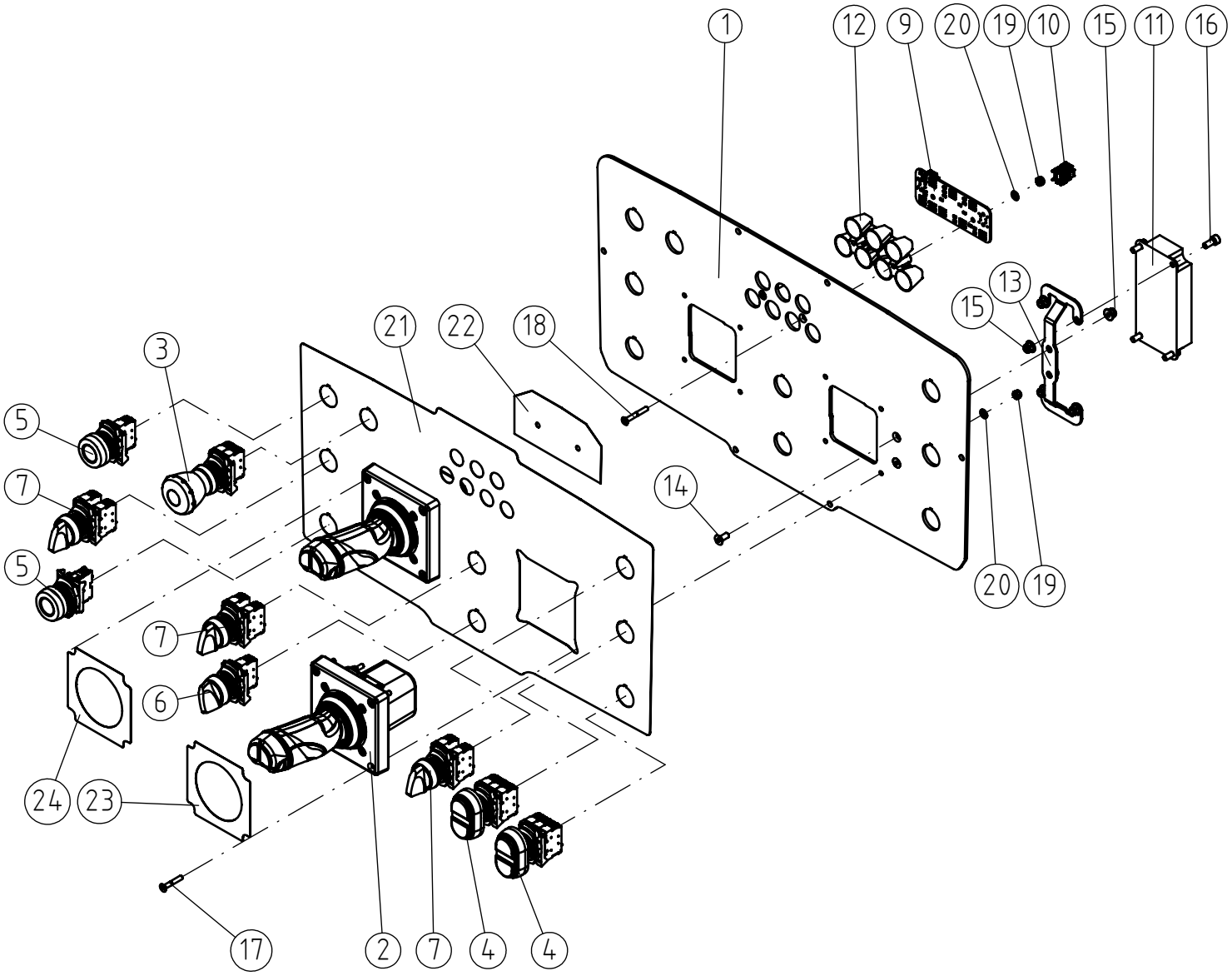

© This drawing is the property of Avant Tecno Oy.

© This drawing is the property of Avant Tecno Oy.

A444823 DASHBOARD PLATFORM ASSEMBLY LEGUAN 220

REF	PART NO	QTY	DESCRIPTION	NOTES	PAGE
1	A444988	1	PLATE DASHBOARD		-
2	A431624	2	JOYSTICK JC4000 PLATFORM L135 NEO		-
3	A419326	1	EMERGENCY STOP 2*NC		-
4	A423432	2	PUSHBUTTON WITH 2 BUTTONS + GREEN LIGHT		-
5	A419324	2	PUSHBUTTON 1*NO		-
6	A419327	1	ROTARY SWITCH 1*NO 2 POSITIONS 0-1		-
7	A421459	3	SELECTOR SWITCH 2*NO 3-POSITION		-
8	73532	3	GROMMET F15/F10/F5		-
9	A433650	1	INDICATOR PANEL PLATFORM L135 NEO		-
10	A435230	2	DIRECT CONNECTOR SDDC 1,5		-
11	A446006	1	CIRCUIT BOARD CONTROLS PLATFORM LEGUAN		-
12	A435729	1	HOUSING LED INDICATORS PLATFORM L135 NEO		-
13	A453773	1	MOUNTING PLATE CIRCUIT BOARD LEGUAN 220		-
14	75148	2	COUNTERSUNK HEAD SCREW M5*12 DIN 7991		-
15	A447716	6	HEXAGONAL NUT M5 NYLOC DIN 6926		-
16	A453776	4	HEXAGONAL HEAD SCREW M5*12 DIN 912		-
17	A438204	8	COUNTERSUNK HEAD SCREW M4*25 DIN 7991		-
18	A438205	2	COUNTERSUNK HEAD SCREW M4*30 DIN 7991		-
19	72313	10	HEXAGONAL NUT M4 DIN 985 NYLOC		-
20	75097	10	WASHER M4 A4,3 DIN 125		-
21	A444831	1	DECAL DASHBOARD PLATFORM LEGUAN 220		-
21	A457474	1	DECAL DASHBOARD PLATFORM, AUSTRALIA		-
22	A454639	1	DECAL INDICATORS PLATFORM L225		-
23	A454632	1	DECAL JOYSTICK, RIGHT		-
24	A454633	1	DECAL JOYSTICK, LEFT		-

© This drawing is the property of Avant Tecno Oy.

© This drawing is the property of Avant Tecno Oy.

A453723 WORK PLATFORM ACCESSORIES

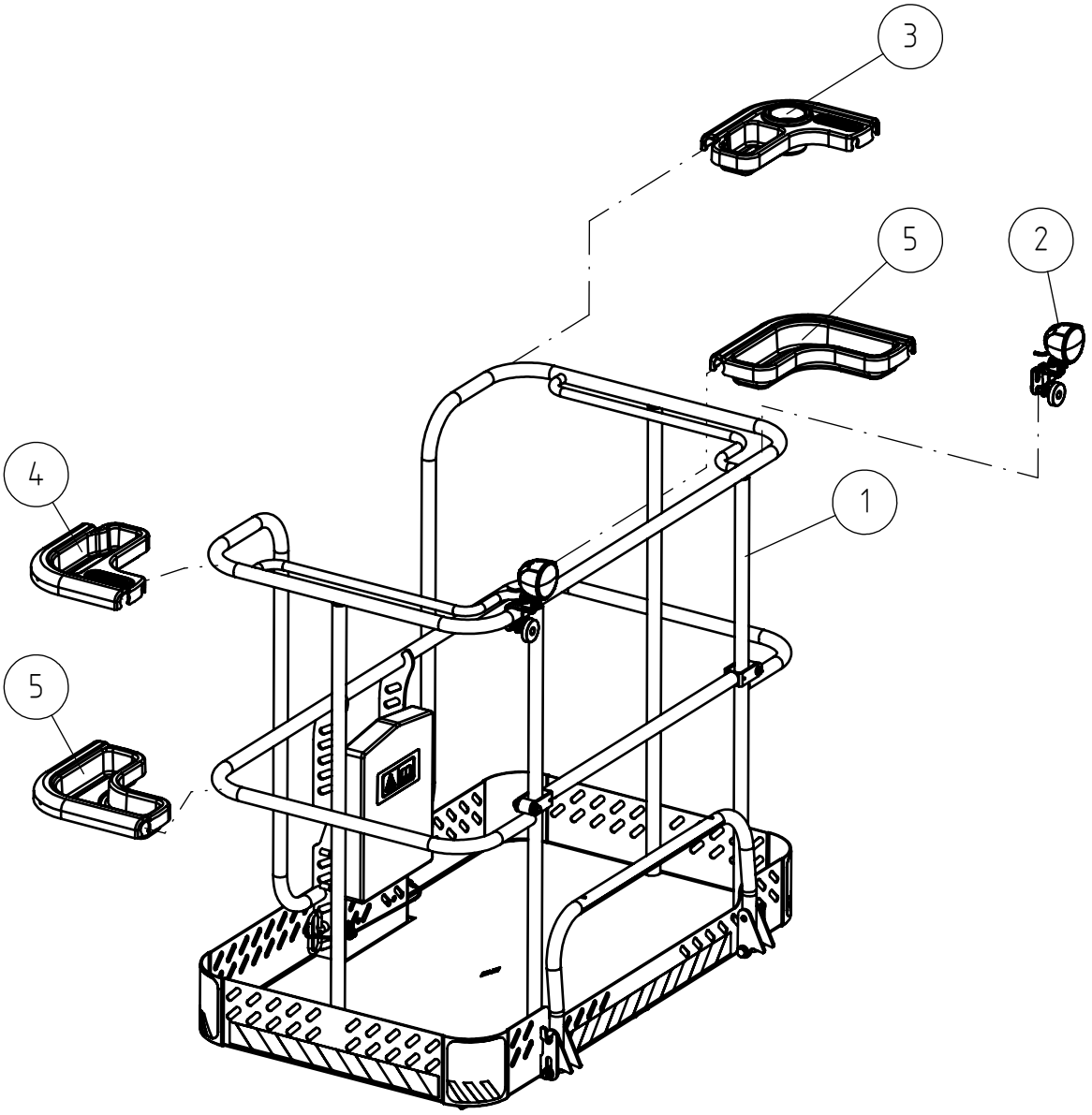

© This drawing is the property of Avant Tecno Oy.

© This drawing is the property of Avant Tecno Oy.

A453723 WORK PLATFORM ACCESSORIES

REF	PART NO	QTY	DESCRIPTION	NOTES	PAGE
1	A453724	1	WORK PLATFORM ASSEMBLY LEGUAN 220		142
1	A443939	1	WORK PLATFORM 900X820 MM ASSEMBLY LEGUAN		144
2	A421621	2	WORK LIGHT, ON PLATFORM, LEGUAN 190		150
3	A418885	1	EQUIPMENT HOLDER, RIGHT, PLATFORM L135		-
4	A418889	1	EQUIPMENT HOLDER, LEFT, PLATFORM L135		-
5	A418891	2	EQUIPMENT HOLDER, PLATFORM L135		-

© This drawing is the property of Avant Tecno Oy.

© This drawing is the property of Avant Tecno Oy.

A453724 WORK PLATFORM ASSEMBLY LEGUAN 220

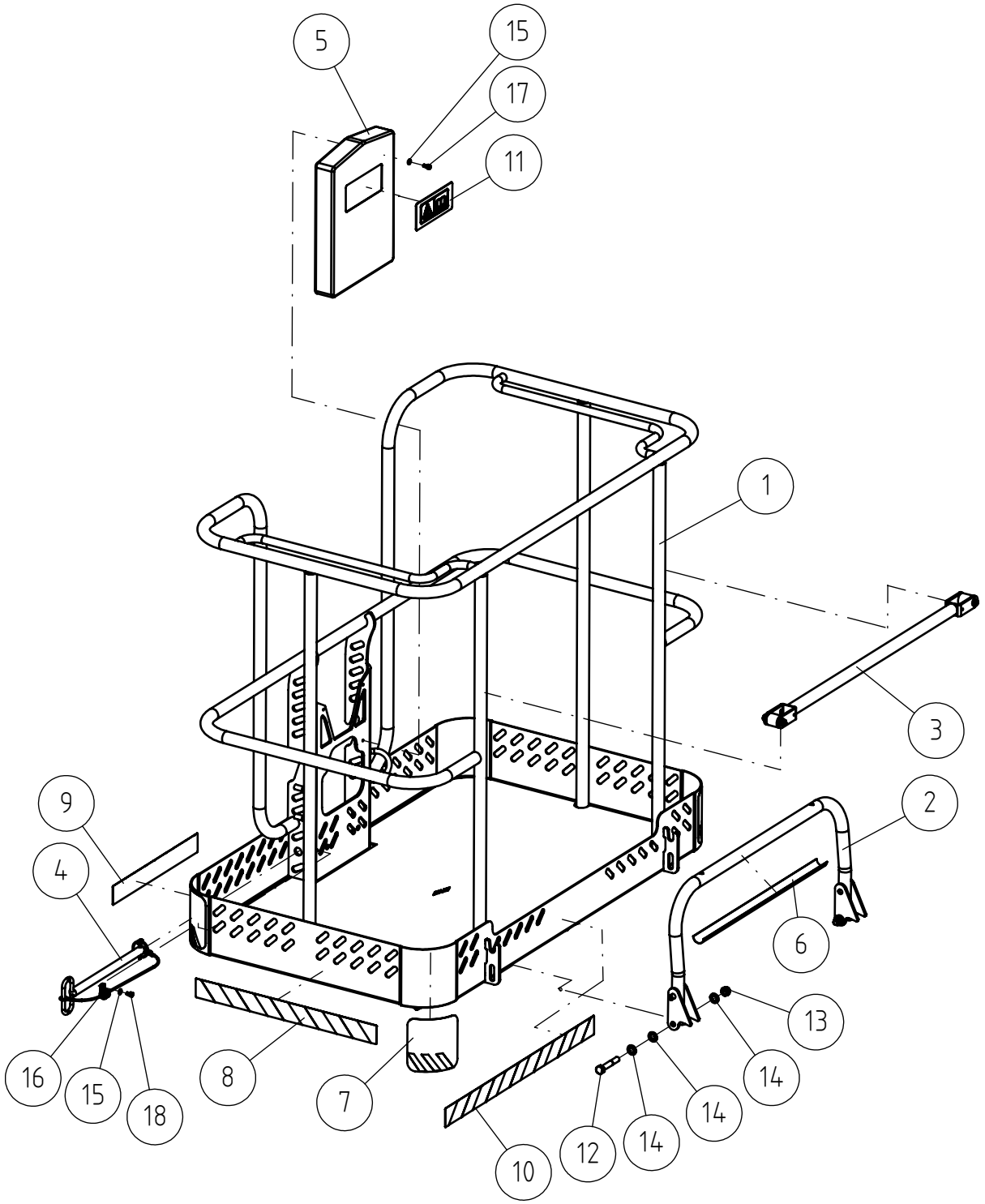

© This drawing is the property of Avant Tecno Oy.

© This drawing is the property of Avant Tecno Oy.

A453724 WORK PLATFORM ASSEMBLY LEGUAN 220

REF	PART NO	QTY	DESCRIPTION	NOTES	PAGE
1	A419884	1	WORK PLATFORM LEGUAN 1270X744MM		-
2	A36191	1	STEP, WORK PLATFORM, LEGUAN 135		-
3	A417499	1	CROSS BAR, OPENING PLATFORM L135		148
4	A420082	1	LOCKING PIN WORK PLATFORM LEGUAN		-
5	64662	1	BOX, OPERATORS MANUAL, AP5044 PLASTIC		-
6	A420079	1	ANTI SLIP ADHESIVE TAPE L=560 LEGUAN		-
7	A421421	4	HAZARD TAPE YELLOW/BLACK CORNER PLATFORM		-
7.1	A422446	1	HAZARD TAPE RED/WHITE CORNER PLATFORM		-
8	A421422	2	HAZARD TAPE YELLOW/BLACK SIDE PLATFORM		-
8.1	A422447	1	HAZARD TAPE RED/WHITE SIDE PLATFORM		-
9	A421425	2	HAZARD TAPE YELLOW/BLACK PLATFORM FRONT		-
9.1	A422448	1	HAZARD TAPE RED/WHITE PLATFORM FRONT		-
10	A421418	1	HAZARD TAPE YELLOW/BLACK PLATFORM REAR		-
10.1	A422445	1	HAZARD TAPE RED/WHITE PLATFORM REAR		-
11	A422085	1	DECAL SYMBOL READ OPERATORS MANUAL		-
12	A458022	2	HEXAGONAL SCREW M12*75 DIN 931		-
13	72324	2	HEXAGONAL NUT M 12 NYLOC DIN 985		-
14	A435580	6	WASHER M12 POLYAMID		-
15	71680	5	WASHER M6 DIN 125		-
16	74570	1	PIPE CLAMP F11 MM		-
17	A429653	4	HEXAGONAL HEAD SCREW M6*12 DIN 912 2 8.8		-
18	75089	1	HEXAGONAL HEAD SCREW M6*10 DIN912 2		-

© This drawing is the property of Avant Tecno Oy.

© This drawing is the property of Avant Tecno Oy.

A443939 WORK PLATFORM 900X820 MM ASSEMBLY LEGUAN

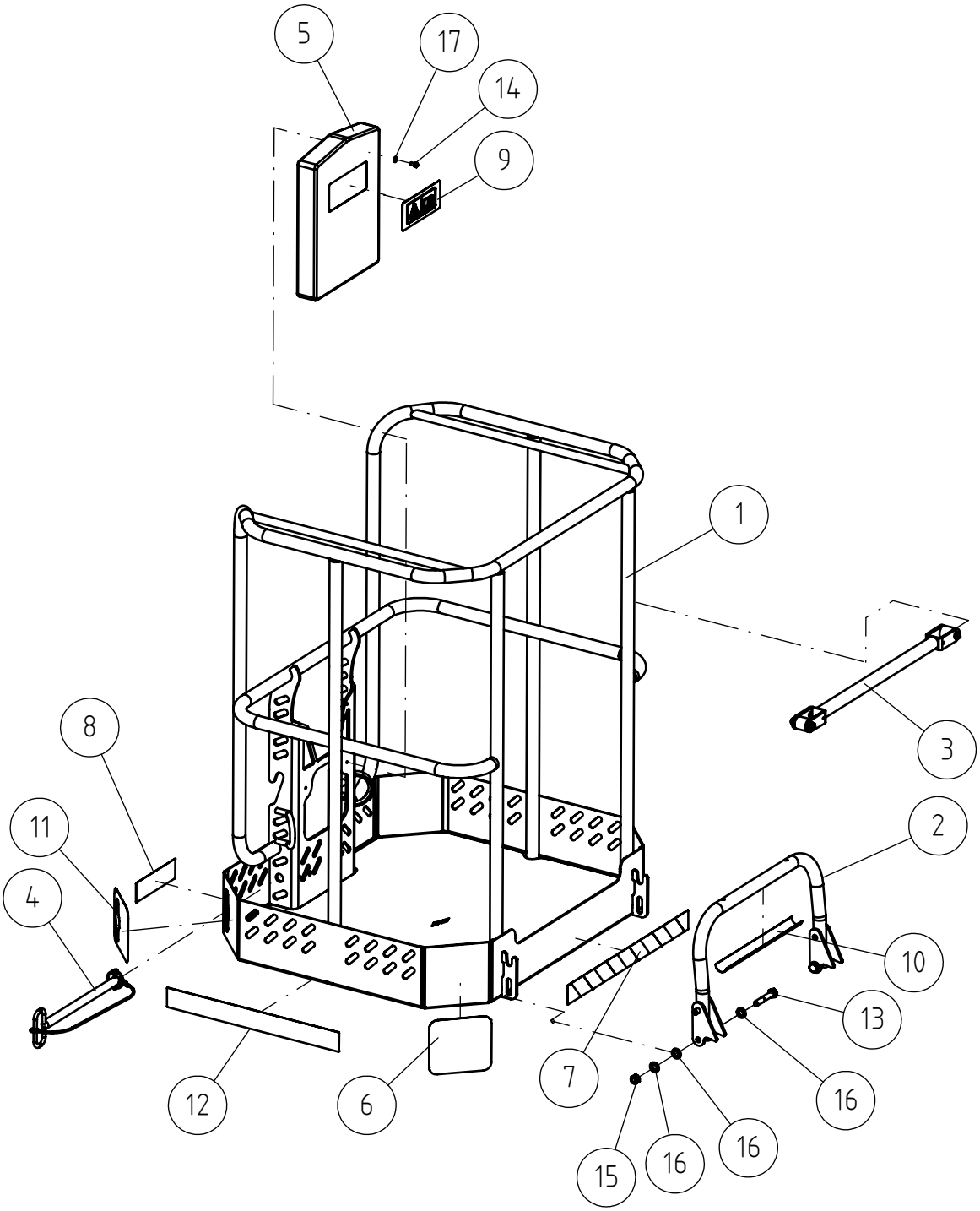

© This drawing is the property of Avant Tecno Oy.

© This drawing is the property of Avant Tecno Oy.

A443939 WORK PLATFORM 900X820 MM ASSEMBLY LEGUAN

REF	PART NO	QTY	DESCRIPTION	NOTES	PAGE
1	A424503	1	WORK PLATFORM 900X820MM LEGUAN		-
2	A443941	1	STEP, WORK PLATFORM 900MM LEGUAN		-
3	A443940	1	CROSS BAR, OPENING PLATFORM 900X820MM		146
4	A420082	1	LOCKING PIN WORK PLATFORM LEGUAN		-
5	64662	1	BOX, OPERATORS MANUAL, AP5044 PLASTIC		-
6	A421421	3	HAZARD TAPE YELLOW/BLACK CORNER PLATFORM		-
6.1	A422446	1	HAZARD TAPE RED/WHITE CORNER PLATFORM		-
7	A421422	1	HAZARD TAPE YELLOW/BLACK SIDE PLATFORM		-
7.1	A422447	1	HAZARD TAPE RED/WHITE SIDE PLATFORM		-
8	A443975	2	HAZARD TAPE YELLOW/BLACK 170*50MM		-
9	A422085	1	DECAL SYMBOL READ OPERATORS MANUAL		-
10	A443973	1	ANTI SLIP ADHESIVE TAPE L=330 STEP		-
11	A443994	1	DECAL YELLOW/BLACK 150*139MM CORNER		-
12	A443995	2	DECAL YELLOW/BLACK + COLLISION HAZARD		-
13	A440119	2	HEXAGONAL SCREW M12*70 DIN 931		-
14	72116	4	HEXAGONAL SCREW M 6*12 DIN 933 ZN		-
15	72324	2	HEXAGONAL NUT M 12 NYLOC DIN 985		-
16	A435580	6	WASHER M12 POLYAMID		-
17	71680	4	WASHER M6 DIN 125		-

© This drawing is the property of Avant Tecno Oy.

© This drawing is the property of Avant Tecno Oy.

A443940 CROSS BAR, OPENING PLATFORM 900X820MM

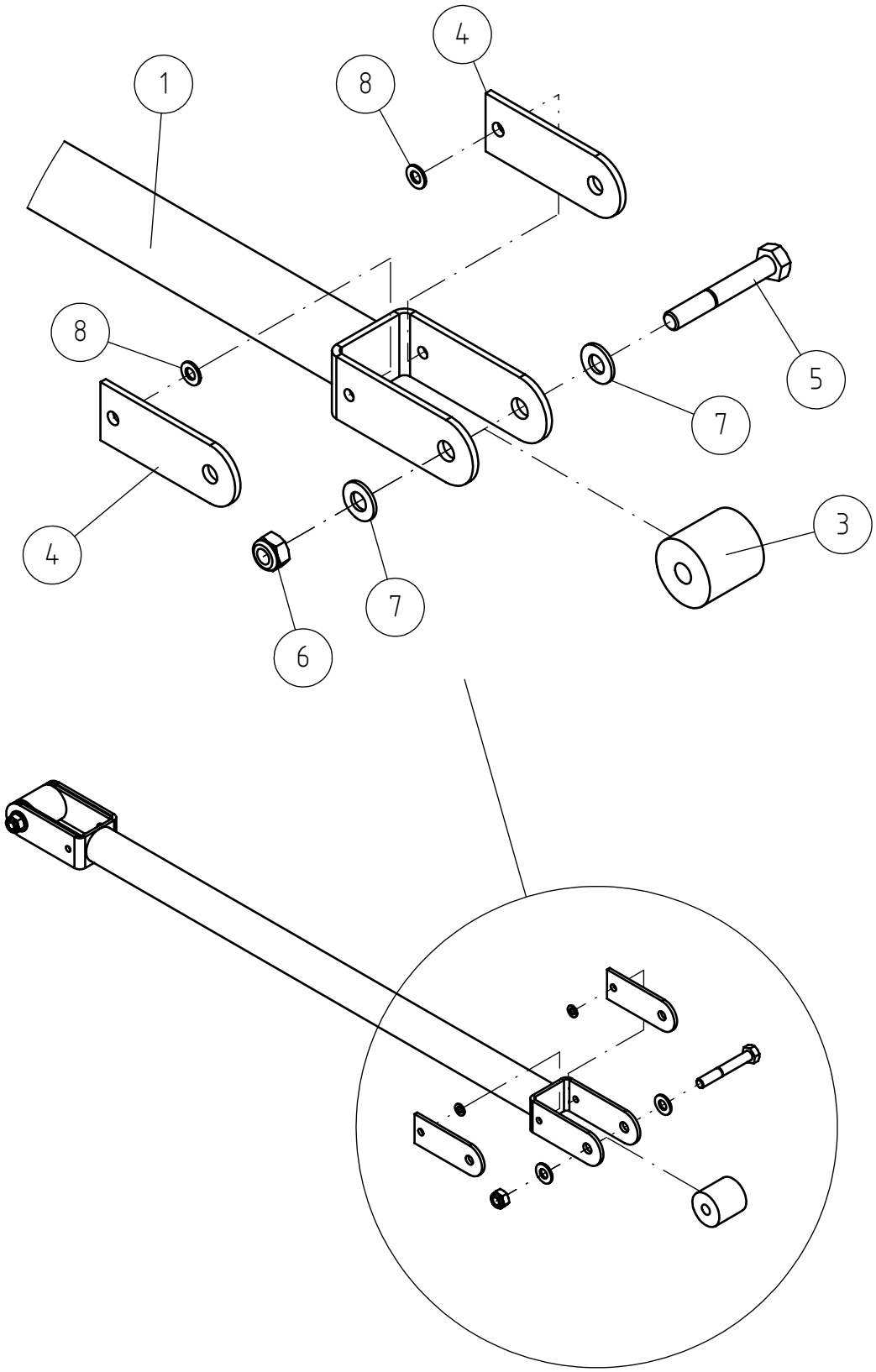

© This drawing is the property of Avant Tecno Oy.

© This drawing is the property of Avant Tecno Oy.

A443940 CROSS BAR, OPENING PLATFORM 900X820MM

REF	PART NO	QTY	DESCRIPTION	NOTES	PAGE
1	A424520	1	CROSS BAR, OPENING PLATFORM 900X820MM		-
2	A418341	2	ROLLER L=30 LEGUAN 135		-
3	A418342	4	WEAR PLATE SELF LEVELLING BAR		-
4	74502	2	HEXAGONAL SCREW M8* 55 DIN 931		-
5	72320	2	HEXAGONAL NUT M8 NYLOC DIN 985		-
6	73122	4	WASHER M8 A8,4 DIN 125 ZN		-
7	74448	4	WASHER M5 A5,3 DIN 125 ZN		-

© This drawing is the property of Avant Tecno Oy.

© This drawing is the property of Avant Tecno Oy.

A417499 CROSS BAR, OPENING PLATFORM L135

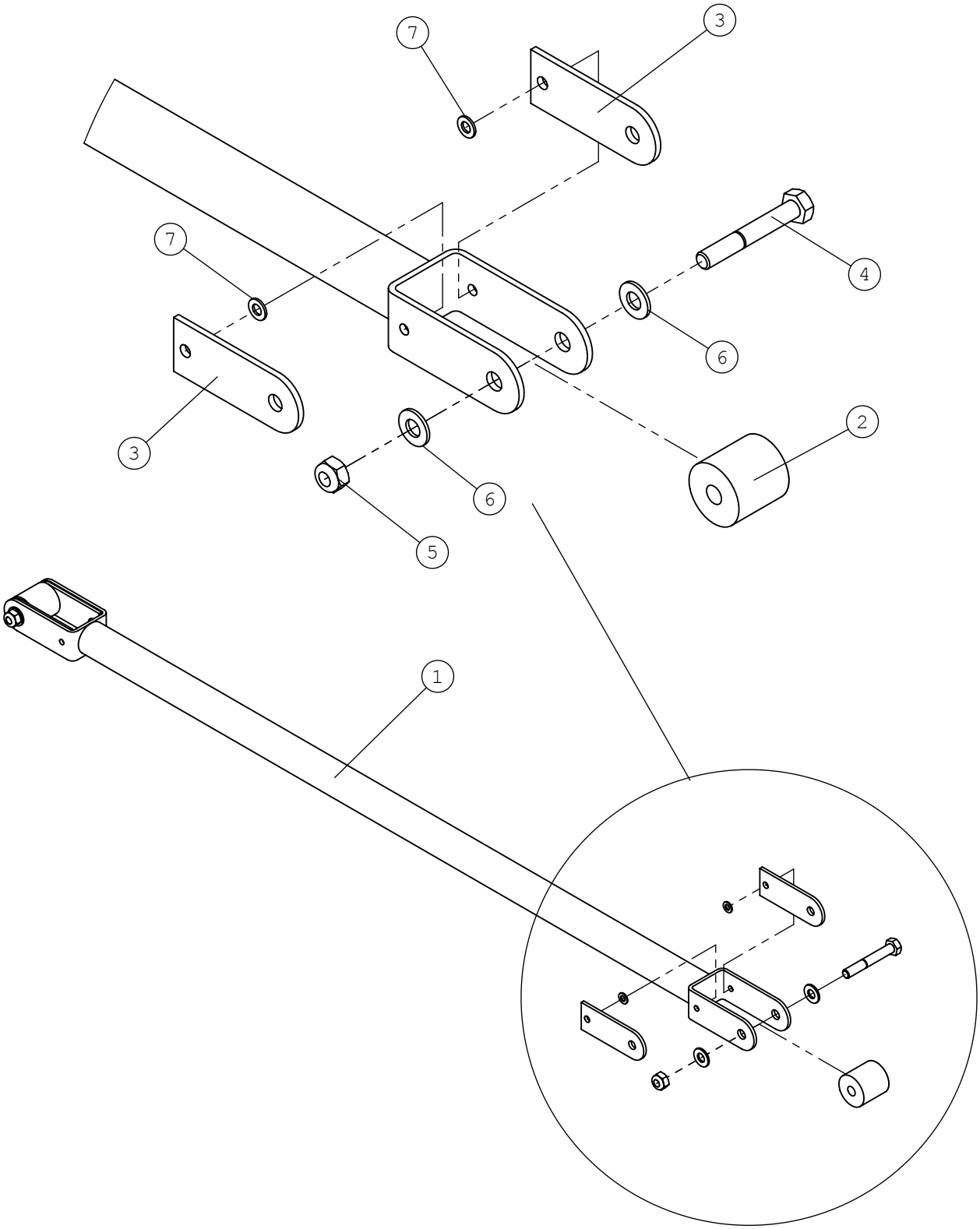

© This drawing is the property of Avant Tecno Oy.

© This drawing is the property of Avant Tecno Oy.

A417499 CROSS BAR, OPENING PLATFORM L135

REF	PART NO	QTY	DESCRIPTION	NOTES	PAGE
1	A417886	1	SELF LEVELLING BAR PLATFORM L135		-
2	A418341	2	ROLLER L=30 LEGUAN 135		-
3	A418342	4	WEAR PLATE SELF LEVELLING BAR		-
4	74502	2	HEXAGONAL SCREW M8* 55 DIN 931		-
5	72320	2	HEXAGONAL NUT M8 NYLOC DIN 985		-
6	73122	4	WASHER M8 A8,4 DIN 125 ZN		-
7	74448	4	WASHER M5 A5,3 DIN 125 ZN		-

© This drawing is the property of Avant Tecno Oy.

© This drawing is the property of Avant Tecno Oy.

A421621 WORK LIGHT, ON PLATFORM, LEGUAN 190

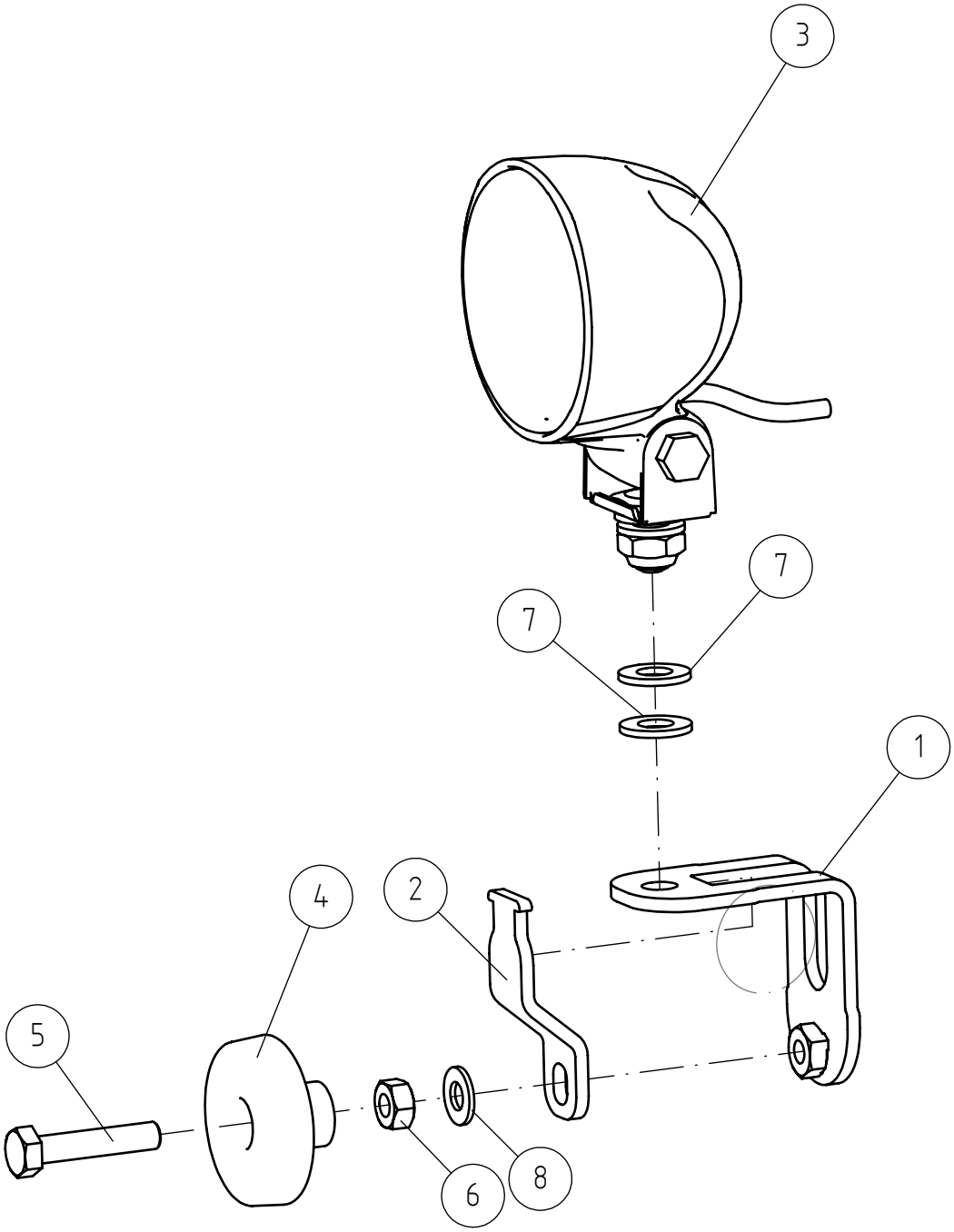

© This drawing is the property of Avant Tecno Oy.

© This drawing is the property of Avant Tecno Oy.

A421621 WORK LIGHT, ON PLATFORM, LEGUAN 190

REF	PART NO	QTY	DESCRIPTION	NOTES	PAGE
1	A421657	1	BRACKET, WORK LIGHT PLATFORM LEGUAN		-
2	A421620	1	TIGHTENER, WORK LIGHT PLATFORM LEGUAN		-
3	A419163	1	WORK LIGHT LED 2500 LUMEN WITH CONNECTOR		-
4	64188	1	FINGER SCREW R5026M8S		-
5	73222	1	HEXAGONAL SCREW M8*40 DIN 933		-
6	72319	1	HEXAGONAL NUT M8 DIN 934		-
7	73121	2	WASHER M10 A10,5 DIN 125 ZN		-
8	73122	1	WASHER M8 A8,4 DIN 125 ZN		-

© This drawing is the property of Avant Tecno Oy.

© This drawing is the property of Avant Tecno Oy.

A456117 DECAL KIT

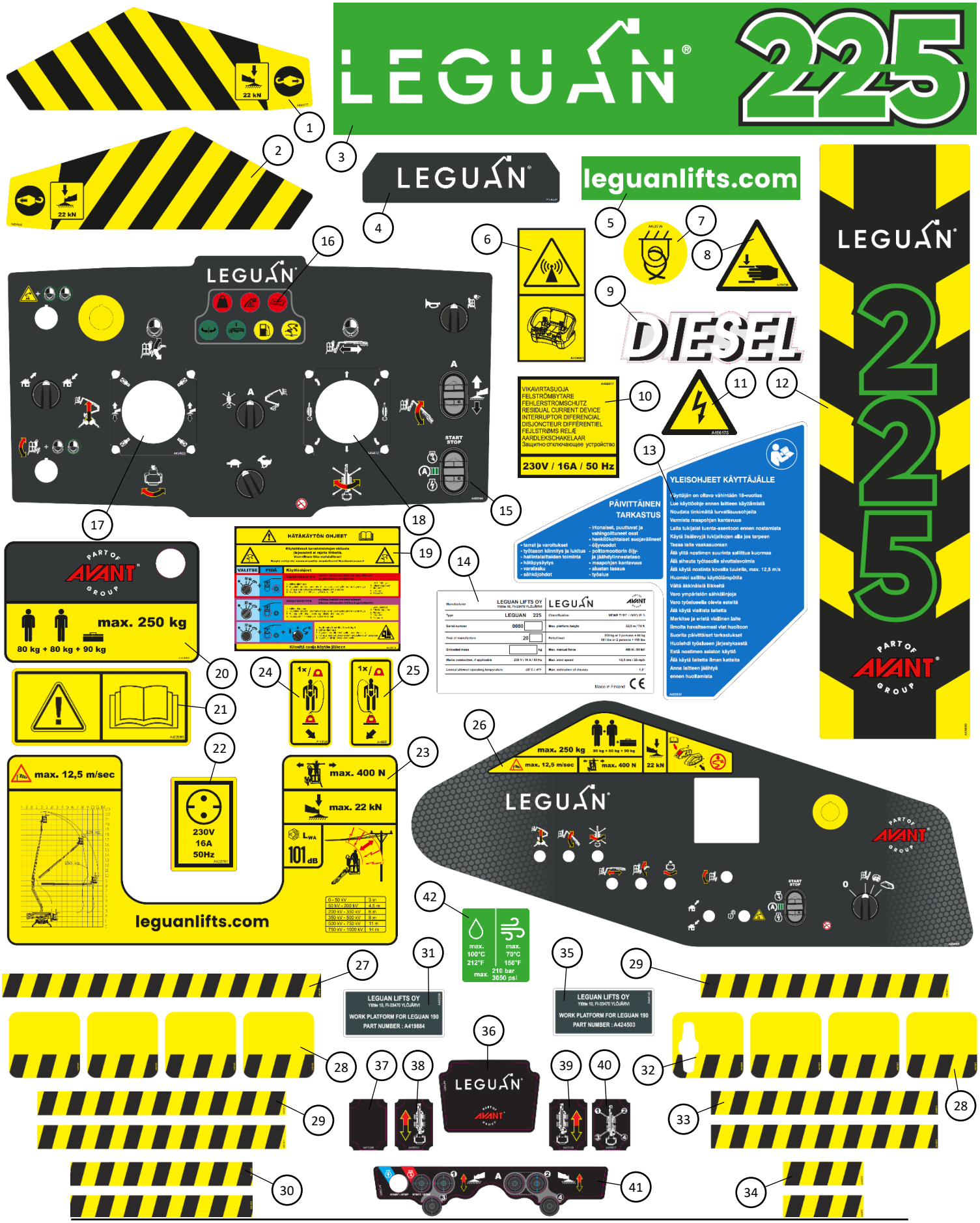

© This drawing is the property of Avant Tecno Oy.

© This drawing is the property of Avant Tecno Oy.

A456117 DECAL KIT

REF	PART NO	QTY	DESCRIPTION	NOTES	PAGE
1	A454277	4	DECAL OUTRIGGER RIGHT LEGUAN 220		-
2	A454090	4	DECAL OUTRIGGER LEFT LEGUAN 220		-
3	A454337	2	DECAL "LEGUAN 225" 215X1127 MM		-
4	A451370	2	DECAL TRACK FRAME		-
5	A454338	2	DECAL WEB ADDRESS		-
6	A419061	1	DECAL RADIO FREQUENCY HAZARD		-
7	A422795	4	DECAL SYMBOL TIE DOWN POINT LEGUAN		-
8	A454796	2	DECAL CRUSHING HAZARD		-
9	A43594	1	DECAL "DIESEL" 32*115 BLACK-WHITE/CLEAR		-
10	A430017	1	DECAL RESIDUAL CURRENT DEVICE		-
11	A456175	1	DECAL ELECTROCUTION HAZARD		-
12	A454065	1	DECAL LOGO KNUCKLE PIECE		-
13	A455639	1	DECAL DAILY INPECTION (FIN)		-
13	A454777	1	DECAL DAILY INSPECTION		-
13	A455631	1	DECAL DAILY INPECTION (GER)		-
13	A457780	1	DECAL DAILY INPECTION (NL)		-
13	A457815	1	DECAL DAILY INPECTION (ES)		-
13	A457817	1	DECAL DAILY INPECTION (PL)		-
13	A457916	1	DECAL DAILY INPECTION (DA)		-
13	A458052	1	DECAL DAILY INPECTION (SK)		-
13	A458110	1	DECAL DAILY INPECTION (SV)		-
13	A458064	1	DECAL DAILY INPECTION (NO)		-
13	A458238	1	DECAL DAILY INSPECTION (IT)		-
13	A456314	1	DECAL DAILY INPECTION (FR)		-
14	A454774	1	TYPE PLATE CE LEGUAN 220		-
14	A456693	1	TYPE PLATE AUS LEGUAN 220		-
14	A456105	1	TYPE PLATE USA LEGUAN 220		-
15	A444831	1	DECAL DASHBOARD PLATFORM LEGUAN 220		-
15	A457474	1	DECAL DASHBOARD PLATFORM, AUSTRALIA		-
16	A454639	1	DECAL INDICATORS PLATFORM L225		-
17	A454633	1	DECAL JOYSTICK, LEFT		-
18	A454632	1	DECAL JOYSTICK, RIGHT		-
19	A422085	1	DECAL SYMBOL READ OPERATORS MANUAL		-
20	A454683	1	DECAL PLATFORM COVER		-
21	A455638	1	DECAL EMERGENCY PROCEDURES (FIN)		-
21	A454782	1	DECAL, EMERGENCY PROCEDURES		-
21	A455630	1	DECAL EMERGENCY PROCEDURES (GER)		-
21	A457779	1	DECAL EMERGENCY PROCEDURES (NL)		-
21	A457814	1	DECAL EMERGENCY PROCEDURES (ES)		-
21	A457816	1	DECAL EMERGENCY PROCEDURES (PL)		-
21	A457915	1	DECAL EMERGENCY PROCEDURES (DA)		-
21	A458051	1	DECAL EMERGENCY PROCEDURES (SK)		-
21	A458109	1	DECAL EMERGENCY PROCEDURES (SV)		-
21	A458063	1	DECAL EMERGENCY PROCEDURES (NO)		-
21	A458236	1	DECAL EMERGENCY PROCEDURES (IT)		-
21	A456315	1	DECAL EMERGENCY PROCEDURES (FR)		-
22	A422794	2	DECAL ELECTRIC BOX L125		-
23	A454792	1	DECAL PLATFORM		-
24	A442882	1	DECAL FASTENING POINT SAFETY HARNESS		-
25	A442881	1	DECAL FASTENING POINT SAFETY HARNESS,		-
26	A454653	1	DECAL LOWER CONTROLS		-
27	A421418	1	HAZARD TAPE YELLOW/BLACK PLATFORM REAR		-
27.1	A422445	1	HAZARD TAPE RED/WHITE PLATFORM REAR		-
28	A421421	4	HAZARD TAPE YELLOW/BLACK CORNER PLATFORM		-
28.1	A422446	1	HAZARD TAPE RED/WHITE CORNER PLATFORM		-
29	A421422	3	HAZARD TAPE YELLOW/BLACK SIDE PLATFORM		-
29.1	A422447	1	HAZARD TAPE RED/WHITE SIDE PLATFORM		-
30	A421425	1	HAZARD TAPE YELLOW/BLACK PLATFORM FRONT		-
30.1	A422448	1	HAZARD TAPE RED/WHITE PLATFORM FRONT		-
31	A430236	1	DECAL TYPE PLATE WORK PLATFORM LEGUAN		-
32	A443994	1	DECAL YELLOW/BLACK 150*139MM CORNER		-
33	A444010	2	HAZARD TAPE YELLOW/BLACK SIDE PLATFORM		-
34	A443975	1	HAZARD TAPE YELLOW/BLACK 170*50MM		-
35	A444145	1	DECAL TYPE PLATE WORK PLATFORM NARROW		-
36	A435901	1	DECAL "LEGUAN 190" REMOTE CONTROL UNIT		-
37	A435900	1	DECAL EMPTY/BLACK REMOTE CONTROL UNIT		-
38	A435898	1	DECAL DRIVING DIRECTION 1 REMOTE CONTROL		-
39	A435899	1	DECAL DRIVING DIRECTION 2 REMOTE CONTROL		-
40	A435897	1	DECAL OUTRIGGERS REMOTE CONTROL LEGUAN		-
41	A435902	1	DECAL SYMBOLS REMOTE CONTROL LEGUAN 190		-
42	A455584	2	DECAL AIR/WATER		-

© This drawing is the property of Avant Tecno Oy.

© This drawing is the property of Avant Tecno Oy.

A456118 DECAL KIT USA

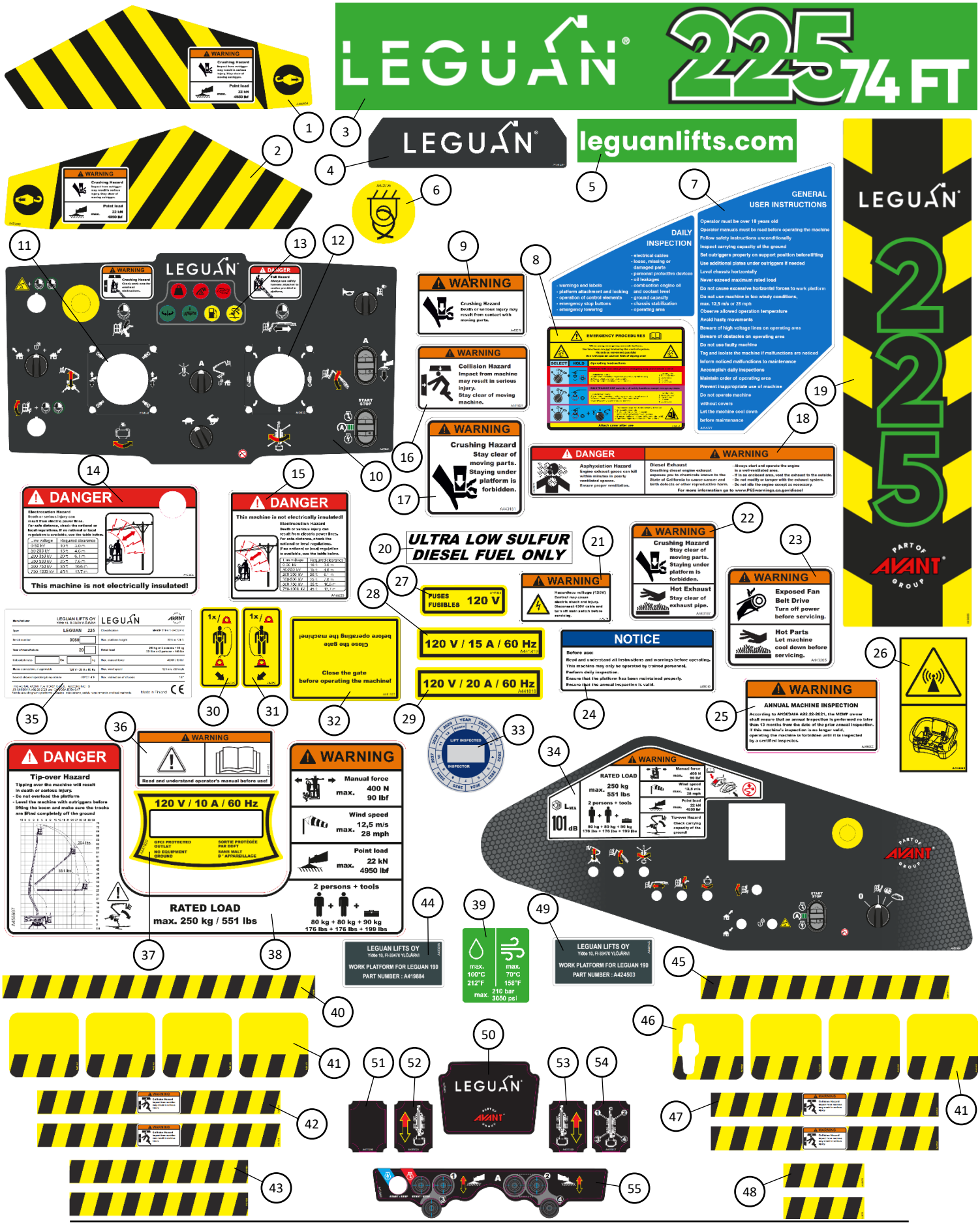

© This drawing is the property of Avant Tecno Oy.

© This drawing is the property of Avant Tecno Oy.

A456118 DECAL KIT USA

REF	PART NO	QTY	DESCRIPTION	NOTES	PAGE
1	A455934	4	DECAL USA OUTGIGGER, RIGHT		-
2	A455935	4	DECAL USA OUTGIGGER, LEFT		-
3	A455932	2	DECAL USA LOGO UPPER BOOM		-
4	A451370	2	DECAL TRACK FRAME		-
5	A454338	2	DECAL WEB ADDRESS		-
6	A422795	4	DECAL SYMBOL TIE DOWN POINT LEGUAN		-
7	A454777	1	DECAL DAILY INSPECTION		-
8	A454782	1	DECAL, EMERGENCY PROCEDURES		-
9	A455970	4	DECAL CRUSHING OF HANDS		-
10	A455944	1	DECAL USA DASHBOARD PLATFORM		-
11	A454633	1	DECAL JOYSTICK, LEFT		-
12	A454632	1	DECAL JOYSTICK, RIGHT		-
13	A454639	1	DECAL INDICATORS PLATFORM L225		-
14	A455960	1	DECAL USA ELECTROCUTION, UPPER CONTROLS		-
15	A455933	1	DECAL USA ELECTROCUTION, LOWER CONTROLS		-
16	A441821	2	DECAL USA COLLISION HAZARD FRONT LEGUAN		-
17	A443151	2	DECAL USA CRUSHING HAZARD REAR LEGUAN		-
18	A442470	1	DECAL USA "DIESEL EXHAUST" LEGUAN 190		-
19	A454065	1	DECAL LOGO KNUCKLE PIECE		-
20	A417275	1	DECAL USA "DIESEL ULTRA LOW SULFUR FUEL"		-
21	A456176	1	DECAL HAZARDOUS VOLTAGE		-
22	A443187	2	DECAL USA CRUSHING HAZARD FRONT LEGUAN		-
23	A443205	1	DECAL USA "EXPOSED BELT DRIVE" LEGUAN		-
24	A456013	1	DECAL USA NOTICE		-
25	A456000	1	DECAL USA ANNUAL INSPECTION		-
26	A419061	1	DECAL RADIO FREQUENCY HAZARD		-
27	A441803	1	DECAL FUSES USA LEGUAN		-
28	A441819	1	DECAL 120V/15A/60HZ LEGUAN		-
29	A441818	1	DECAL 120V/20A/60HZ LEGUAN		-
30	A442882	1	DECAL FASTENING POINT SAFETY HARNESS		-
31	A442881	1	DECAL FASTENING POINT SAFETY HARNESS,		-
32	A441823	1	DECAL CLOSE GATE LEGUAN 190		-
33	A443585	1	DECAL "LIFT INSPECTED" LEGUAN		-
34	A455936	1	DECAL USA LOWER CONTROLS		-
35	A456105	1	TYPE PLATE USA LEGUAN 220		-
36	A441802	1	DECAL USA READ OPERATORS MANUAL LEGUAN		-
37	A441820	1	DECAL SOCKET LEGUAN 190		-
38	A455937	1	DECAL USA PLATFORM		-
39	A455584	2	DECAL AIR/WATER		-
40	A421418	1	HAZARD TAPE YELLOW/BLACK PLATFORM REAR		-
40.1	A422445	1	HAZARD TAPE RED/WHITE PLATFORM REAR		-
41	A421421	4	HAZARD TAPE YELLOW/BLACK CORNER PLATFORM		-
41.1	A422446	1	HAZARD TAPE RED/WHITE CORNER PLATFORM		-
42	A441811	2	HAZARD TAPE YELLOW/BLACK SIDE PLATFORM		-
43	A421425	2	HAZARD TAPE YELLOW/BLACK PLATFORM FRONT		-
43.1	A422448	1	HAZARD TAPE RED/WHITE PLATFORM FRONT		-
44	A430236	1	DECAL TYPE PLATE WORK PLATFORM LEGUAN		-
45	A421422	1	HAZARD TAPE YELLOW/BLACK SIDE PLATFORM		-
45.1	A422447	1	HAZARD TAPE RED/WHITE SIDE PLATFORM		-
46	A443994	1	DECAL YELLOW/BLACK 150*139MM CORNER		-
47	A443995	2	DECAL YELLOW/BLACK + COLLISION HAZARD		-
48	A443975	2	HAZARD TAPE YELLOW/BLACK 170*50MM		-
49	A444145	1	DECAL TYPE PLATE WORK PLATFORM NARROW		-
50	A435901	1	DECAL "LEGUAN 190" REMOTE CONTROL UNIT		-
51	A435900	1	DECAL EMPTY/BLACK REMOTE CONTROL UNIT		-
52	A435898	1	DECAL DRIVING DIRECTION 1 REMOTE CONTROL		-
53	A435899	1	DECAL DRIVING DIRECTION 2 REMOTE CONTROL		-
54	A435897	1	DECAL OUTRIGGERS REMOTE CONTROL LEGUAN		-
55	A435902	1	DECAL SYMBOLS REMOTE CONTROL LEGUAN 190		-

© This drawing is the property of Avant Tecno Oy.

© This drawing is the property of Avant Tecno Oy.

A457955 HYDRAULIC HOSE KIT

PART NO	QTY	LENGTH, mm	USE	FROM	TO
A446502	2	12000	JIB, A	BOOM MANIFOLD	TELE BOOM
			EXTRA HOSE	BOOM MANIFOLD	TELE BOOM
A446290	3	12000	JIB, B	BOOM MANIFOLD	TELE BOOM
			SELF LEVELLING CYL, A	BOOM MANIFOLD	TELE BOOM
			SELF LEVELLING CYL, B	BOOM MANIFOLD	TELE BOOM
A446293	1	2730	EXTRA HOSE	TELE BOOM	PLATFORM
A446294	2	2400	SELF LEVELLING CYL, A	TELE BOOM	SECOND.SELF LEVELLING CYL.
			SELF LEVELLING CYL, B	TELE BOOM	SECOND.SELF LEVELLING CYL.
A448782	2	680	JIB, A	TELE BOOM	JIB CYL.
			JIB, B	TELE BOOM	JIB CYL.
A448775	1	11000	EXTRA HOSE	CHASSIS	BOOM MANIFOLD
A448780	2	7900	MAIN PRESSURE	LOWER BOOM MANIFOLD	BOOM MANIFOLD
			TANK	LOWER BOOM MANIFOLD	BOOM MANIFOLD
A451354	2	2050	TELE.CYL. A	BOOM MANIFOLD	TELE CYL.
			TELE.CYL. B	BOOM MANIFOLD	TELE CYL.
A451359	2	1590	UPPER BOOM CYL, A	BOOM MANIFOLD	UPPER BOOM CYL.
			UPPER BOOM CYL, B	BOOM MANIFOLD	UPPER BOOM CYL.
A451786	1	1120	SELF LEVELLING CYL, A	BOOM MANIFOLD	MAIN SELF LEVEL.CYL
A451788	1	870	SELF LEVELLING CYL, B	BOOM MANIFOLD	MAIN SELF LEVEL.CYL
A452165	2	1100	LIFT CYL, A	LOWER BOOM MANIFOLD	LIFT CYL.
			LIFT CYL, B	LOWER BOOM MANIFOLD	LIFT CYL.
A452422	2	2500	MAIN PRESSURE	PUMP MANIFOLD	LOWER BOOM MANIFOLD
			TANK	PUMP MANIFOLD	LOWER BOOM MANIFOLD
A452423	2	750	MAIN PRESSURE	PUMP MANIFOLD	OUTRIGGER MANIFOLD
			TANK	PUMP MANIFOLD	OUTRIGGER MANIFOLD
A451781	2	3750	OUTRIGGER 1 A	OUTRIGGER MANIFOLD	OUTRIGGER 1
			OUTRIGGER 1 B	OUTRIGGER MANIFOLD	OUTRIGGER 1
A451782	2	3350	OUTRIGGER 2 A	OUTRIGGER MANIFOLD	OUTRIGGER 2
			OUTRIGGER 2 B	OUTRIGGER MANIFOLD	OUTRIGGER 2
A451783	2	2300	OUTRIGGER 3 A	OUTRIGGER MANIFOLD	OUTRIGGER 3
			OUTRIGGER 3 B	OUTRIGGER MANIFOLD	OUTRIGGER 3
A451779	2	1900	OUTRIGGER 4 A	OUTRIGGER MANIFOLD	OUTRIGGER 4
			OUTRIGGER 4 B	OUTRIGGER MANIFOLD	OUTRIGGER 4
A451506	2	800	DRIVE MOTOR RIGHT A	PUMP MANIFOLD	DRIVE MOTOR RIGHT
			DRIVE MOTOR RIGHT B	PUMP MANIFOLD	DRIVE MOTOR RIGHT
A451508	2	755	DRIVE MOTOR LEFT A	PUMP MANIFOLD	DRIVE MOTOR LEFT
			DRIVE MOTOR LEFT B	PUMP MANIFOLD	DRIVE MOTOR LEFT
A451509	1	855	SPEED RIGHT	PUMP MANIFOLD	DRIVE MOTOR RIGHT
A451510	3	650	SPEED LEFT	PUMP MANIFOLD	DRIVE MOTOR LEFT
			MOTOR LEAK RIGHT	DRIVE MOTOR RIGHT	TANK
			MOTOR LEAK LEFT	DRIVE MOTOR LEFT	TANK
A452424	2	1100	PRESSURE, ELECT. MOTOR	ELECT. MOTOR PUMP	PUMP MANIFOLD
			PRESSURE, ELECT.MOTOR	ELECT. MOTOR PUMP	PUMP MANIFOLD
A452425	2	1800	PRESSURE, DIESEL MOTOR	DIESEL MOTOR PUMP	PUMP MANIFOLD
			PRESSURE, DIESEL MOTOR	DIESEL MOTOR PUMP	PUMP MANIFOLD
A452426	2	720	SLEW MOTOR, A	PUMP MANIFOLD	SLEW MOTOR
			SLEW MOTOR, B	PUMP MANIFOLD	SLEW MOTOR
A452429	2	580	SLEW MOTOR LEAK	SLEW MOTOR	TANK
A453299	1	920	PRESSURE, BACKUP PUMP	BACKUP PUMP	PUMP MANIFOLD
A455094	1	750	SUCTION, BACKUP PUMP	SUCTION MANIFOLD	BACKUP PUMP
A452427	1	480	MAIN PRESSURE	PUMP MANIFOLD	PUMP MANIFOLD
A452428	1	800	TANK	PUMP MANIFOLD	OIL COOLER
A453294	1	660	TANK	OIL COOLER	RETURN FILTER
A450144	1	1200	SUCTION	TANK	SUCTION MANIFOLD
A449409	1	470	SUCTION	SUCTION MANIFOLD	DIESEL MOTOR
A453012	1	180	DRAIN	RETURN FILTER	TANK
A449454	1	400	SUCTION	SUCTION MANIFOLD	ELECT. MOTOR

© This drawing is the property of Avant Tecno Oy.

© This drawing is the property of Avant Tecno Oy.

A457955 HYDRAULIC HOSE KIT

REF	PART NO	QTY	DESCRIPTION	NOTES	PAGE
1	A446502	2	HYDR. HOSE L=12000		-
2	A446290	3	HYDR. HOSE L=12000		-
3	A446293	1	HYDR. HOSE L=2850		-
4	A446294	2	HYDR. HOSE L=2500		-
5	A448782	2	HYDR. HOSE L=730		-
6	A448775	1	HYDR. HOSE L=11000		-
7	A448780	2	HYDR. HOSE L=7900		-
8	A451354	2	HYDR. HOSE L=2050		-
9	A451359	2	HYDR. HOSE L=1590		-
10	A451786	1	HYDR. HOSE L=1120		-
11	A451788	1	HYDR. HOSE L=870		-
12	A452165	2	HYDR. HOSE L=1100		-
13	A452422	2	HYDR. HOSE L=2200		-
14	A452423	2	HYDR. HOSE L=750		-
15	A451781	2	HYDR. HOSE L=3750		-
16	A451782	2	HYDR. HOSE L=3350		-
17	A451783	2	HYDR. HOSE L=2300		-
18	A451779	2	HYDR. HOSE L=1900		-
19	A451506	2	HYDR. HOSE L=800		-
20	A451508	2	HYDR. HOSE L=755		-
21	A451509	1	HYDR. HOSE L=855		-
22	A451510	3	HYDR. HOSE L=650		-
23	A452424	2	HYDR. HOSE L=1200		-
24	A452425	2	HYDR. HOSE L=1800		-
25	A452426	2	HYDR. HOSE L=1000		-
26	A452429	2	HYDR. HOSE L=580		-
27	A453299	1	HYDR. HOSE L=920		-
28	A455094	1	HYDR. HOSE L=750		-
29	A452427	1	HYDR. HOSE L=480		-
30	A452428	1	HYDR. HOSE L=800		-
31	A453294	1	HYDR. HOSE L=660		-
32	A450144	1	INLET HOSE L=1200 LEGUAN 220		-
33	A449409	1	HYDR. HOSE L=470		-
34	A453012	1	DRAIN HOSE L=180		-
35	A449454	1	INLET HOSE L=400 F19/29		-

© This drawing is the property of Avant Tecno Oy.

© This drawing is the property of Avant Tecno Oy.

A457975 CABLE HARNESSES COMPLETE

PART NO	Description 1	Description 2
A451231	Cable harnesses	
A436953	Joystick cable	X91 - E10
A436953	Joystick cable	X92 - E11
A454051	Hydraulic oil pressure sensors	E15.8 - P2+P7
A440382	Lower boom CAN bus cable 1	X42- E4
66319	Front left outrigger sensor	E15.1 - S21
66319	Front right outrigger sensor	E15.2 - S22
A440378	Rear left outrigger sensor	E15.3 - S23
A440378	Rear right outrigger sensor	E15.4 - S24
66318	Front left outrigger beacon splitter,	H21 - S21/E15.1
66318	Front right outrigger beacon splitter,	H22 - S22/E15.2
66318	Rear left outrigger beacon splitter, option	H23 - S23/E15.3
66318	Rear right outrigger beacon splitter,	H24 - S24/E15.4
66315	Boom center position sensor	S25 - X40
A454859	Dead man pedal cable, option	S81 - X.DMP
A449735	Work light harness, option	X.WL - H25+H26
A453144	Remote control harness, option	X13 - E12.C+X43
66319	Remote controller pairing cable, option	E12.B - E13

© This drawing is the property of Avant Tecno Oy.

© This drawing is the property of Avant Tecno Oy.

A457975 CABLE HARNESSES COMPLETE

REF	PART NO	QTY	DESCRIPTION	NOTES	PAGE
1	A451231	1	CABLE HARNESSES		160
2	A436953	2	CABLE 12-POLE 300 MM		-
3	A454051	1	HYDRAULIC OIL PRESUURE SENSORS		-
4	A440382	1	CAN CABLE M12 10M		-
5	66319	3	JUMPER CABLE EVC685 4M 60VAC/4A		-
6	A440378	2	CONNECTION CABLE 3M M12X1		-
7	66318	4	Y JUMPER CABLE 0,1M 60VAC/4A		-
8	66315	1	JUMPER CABLE 0,6M 60VAC/4A		-
9	A454859	1	DEAD MAN PEDAL CABLE, OPTION		-
10	A449735	1	WIRE HARNESS, WORK LIGHTS		-
11	A453144	1	REMOTE CONTROL HARNESS, OPTION		-

© This drawing is the property of Avant Tecno Oy.

© This drawing is the property of Avant Tecno Oy.

A451231 CABLE HARNESSES

PART NO	Description 1	Description 2
A422870	230 VAC box control cable	E15.7 - 230 VAC box
A450127	Basket logic controller harness	
A450543	Lower control logic controller harness 1	
A450544	Lower control logic controller harness 2	
A451232	Chassis sensor splitter cable	E15 - X30+X31
A451233	Engine harness	X46+X47 - engine
A451234	Pump manifold harness	K1...K17 - X44+X45
A451235	Boom rotation sensor cable	E15.5 - E17
A451236	Emergency use and oil cooler fan cable	X3 - M3+K70+K50
A451237	Lower boom cable 1	X6 - X51
A451238	Lower boom cable 2	X7 - X52
A451239	Boom manifold harness	K20...K29 - X53
A451240	Lower boom control manifold cable	K18...K19 - X38
A451241	Lower boom emergency lowering cable	K28 - X39
A451242	Lower control switches 1	X25 - switches
A451243	Lower control switches 2	X26 - switches
A451244	Lower control switches 3	X27 - switches
A451245	Basket control switches 1	E8.X87 - switches
A451246	Basket control switches 2	E8.X88 - switches
A451247	Basket control switches 3	E8.X89 - switches
A453125	Lower boom cable 3 (boom manifold)	X53 - X41
A453127	Lower boom 230 VAC cable	X94 - X54
A453129	Lower boom CAN bus cable 2	E3 - E16
A453130	Upper boom cable 1	X51 - X61
A453131	Upper boom cable 2	X52 - X62
A453134	Upper boom 230 VAC cable	X54 - X64
A453135	Upper boom CAN bus cable	E4 - X63
A453137	Jib boom cable 1	X61 - X71
A453138	Jib boom cable 2	X62 - X72
A453139	Jib boom 230 VAC cable	X64 - J2
A453140	Jib boom CAN cable 1	X63 - X73
A453141	Jib boom CAN cable 2	E9 - X74
A453142	Jib boom emergency lowering cable	K30 - X70
A453143	Engine cable	X32+X33 - X46+X47
A453152	Battery - main switch cable	BT - K50
A453153	Battery - chassis GND cable	BT - GND
A453154	Main switch - Kubota start cable	K50 - M51
A453155	Kubota start - charger cable	M51 - T50
A453156	Kubota - chassis GND cable	Engine - GND
A453158	Pump manifold - chassis GND cable	Manifold - chassis GND
A453159	Fuse - lower control PCB cable	F50 - X1
A453160	Chassis GND - lower control PCB cable	GND - X2
A453161	Fuse - emergency pump cable	F51 - K70
A453162	Emergency pump relay - pump cable	K70 - M70
A453163	Emergency use pump - chassis GND cable	M70 - GND
A453398	Main switch and hdyraulic oil temperature	E15.6 - K50+P3
A453435	Pump manifold cable	X44+X45 - X34+X35
A454854	230 VAC box - lower boom cable	X95 - X94
A454855	230 VAC box - electric motor cable	X95 - X96
A454857	Electric motor - 230 VAC box cable	X96 - M40

© This drawing is the property of Avant Tecno Oy.

© This drawing is the property of Avant Tecno Oy.

A451231 CABLE HARNESSES

REF	PART NO	QTY	DESCRIPTION	NOTES	PAGE
1	A422870	1	WIRE, 230V CONNECTION BOX LEGUAN 190		-
2	A450127	1	PLATFORM LOGIC CONTROLLER HARNESS		-
3	A450543	1	LOWER CONTROL LOGIC CONTROLLER HARNESS 1		-
4	A450544	1	LOWER CONTROL LOGIC CONTROLLER HARNESS 2		-
5	A451232	1	CHASSIS SENSOR SPLITTER CABLE		-
6	A451233	1	WIRE HARNESS ENGINE D902 LEGUAN 220		-
7	A451234	1	WIRE HARNESS PUMP BLOCK LEGUAN 220		-
8	A451235	1	SENSOR CABLE BOOM ROTATION		-
9	A451236	1	EMERGENCY USE AND OIL COOLER FAN CABLE		-
10	A451237	1	CABLE 1 LOWER BOOM		-
11	A451238	1	CABLE 2 LOWER BOOM		-
12	A451239	1	WIRE HARNESS BOOM BLOCK LEGUAN 220		-
13	A451240	1	CONTROL MANIFOLD CABLE LOWER BOOM		-
14	A451241	1	EMERGENCY LOWERING CABLE LOWER BOOM		-
15	A451242	1	LOWER CONTROL SWITCHES 1		-
16	A451243	1	LOWER CONTROL SWITCHES 2		-
17	A451244	1	LOWER CONTROL SWITCHES 3		-
18	A451245	1	PLATFORM CONTROL SWITCHES 1		-
19	A451246	1	PLATFORM CONTROL SWITCHES 2		-
20	A451247	1	PLATFORM CONTROL SWITCHES 3		-
21	A453125	1	CABLE 3 LOWER BOOM		-
22	A453127	1	CABLE 230V LOWER BOOM LEGUAN 220		-
23	A453129	1	CAN CABLE 2 LOWER BOOM LEGUAN 220		-
24	A453130	1	CABLE 1 UPPER BOOM LEGUAN 220		-
25	A453131	1	CABLE 2 UPPER BOOM LEGUAN 220		-
26	A453134	1	CABLE 230V UPPER BOOM LEGUAN 220		-
27	A453135	1	CAN CABLE UPPER BOOM LEGUAN 220		-
28	A453137	1	CABLE 1 JIB BOOM LEGUAN 220		-
29	A453138	1	CABLE 2 JIB BOOM LEGUAN 220		-
30	A453139	1	CABLE 230V JIB BOOM LEGUAN 220		-
31	A453140	1	CAN CABLE 1 JIB BOOM LEGUAN 220		-
32	A453141	1	CAN CABLE 2 JIB BOOM LEGUAN 220		-
33	A453142	1	EMERGENCY LOWERING CABLE JIB BOOM		-
34	A453143	1	ENGINE CABLE		-
35	A453152	1	BATTERY - MAIN SWTCH CABLE		-
36	A453153	1	BATTERY - CHASSIS GND CABLE		-
37	A453154	1	MAIN SWITCH - KUBOTA START CABLE		-
38	A453155	1	KUBOTA START - CHARGER CABLE		-
39	A453156	1	KUBOTA - CHASSIS GND CABLE		-
40	A453158	1	PUMP MANIFOLD - CHASSIS GND CABLE		-
41	A453159	1	FUSE - LOWER CONTROL PCB CABLE		-
42	A453160	1	CHASSIS GND - LOWER CONTROL PCB CABLE		-
43	A453161	1	FUSE - EMERGENCY PUMP CABLE		-
44	A453162	1	EMERGENCY PUMP RELAY - PUMP CABLE		-
45	A453163	1	EMERGENCY USE PUMP - CHASSIS GND CABLE		-
46	A453398	1	MAIN SWITCH AND HYDRAULIC OIL		-
47	A453435	1	PUMP MANIFOLD CABLE		-
48	A454854	1	230 VAC BOX - LOWER BOOM CABLE		-
49	A454855	1	230 VAC BOX - ELECTRIC MOTOR CABLE		-
50	A454857	1	ELECTRIC MOTOR - 230 VAC BOX CABLE		-

© This drawing is the property of Avant Tecno Oy.

Varaosat
Spare parts

spareparts.leguan@avanttecno.com

Leguan Lifts Oy
Ylötie 10
FI-33470 Ylöjärvi Finland